DECnet SNA Gateway for Channel Transport

Installation (OpenVMS)

Part Number: AA-MA07E-TE

November 1993

This manual explains how to install the DECnet SNA Gateway for Channel Transport software, including Gateway Management, on an OpenVMS host, configure the system, and load the software.

Revision/Update Information:	This is a revised manual.
Operating System and Version:	OpenVMS VAX V5.4 or later OpenVMS AXP V1.5
Software Version:	DECnet SNA Gateway for Channel Transport, V2.1

November 1993

The information in this document is subject to change without notice and should not be construed as a commitment by Digital Equipment Corporation. Digital Equipment Corporation assumes no responsibility for any errors that may appear in this document.

The software described in this document is furnished under a license and may be used or copied only in accordance with the terms of such a license.

No responsibility is assumed for the use or reliability of software on equipment that is not supplied by Digital Equipment Corporation or its affiliated companies. Restricted Rights: Use, duplication, or disclosure by the U.S. Government is subject to restrictions as set forth in subparagraph (c)(1)(ii) of the Rights in Technical Data and Computer Software clause at DFARS 252.227-7013.

Copyright ©1988, 1991, 1993 by Digital Equipment Corporation
All Rights Reserved

The following are trademarks of Digital Equipment Corporation:

AXP, DEC, DEC/CMS, DEC/MSS, DECnet, DECsystem-10, DECSYSTEM-20, DECUS, DECwriter, DIBOL, EduSystem, IAS, MASSBUS, OpenVMS, PDP, PDT, RSTS, RSX, UNIBUS, VAX, VAXcluster, VMS, VT, and the Digital logo.

IBM is a registered trademark of International Business Machines Corporation.

Contents

Preface v

1 Preparing for Installation and Configuration

1.1 Inspecting the Distribution Kit 1–2
1.2 Preparing the IBM SNA Environment 1–3
1.3 Identifying Where the Gateway-CT Software Will Be Installed 1–3
1.4 Verifying Required Disk Space 1–4
1.5 Verifying Necessary Privileges 1–4
1.6 Verifying Required Process Account Quotas 1–4
1.7 Verifying the Required OpenVMS Version 1–5
1.8 Installing DECnet SNA OpenVMS Access Routines 1–6
1.9 Backing Up Your System Disk 1–6
1.10 Checking Required OpenVMS and DECnet Files 1–6
1.11 Configuration Considerations 1–6
1.12 Preparing for the Configuration 1–7
1.13 Part 1: Information About the Gateway Definition in the Load Host 1–7
1.14 Part 2: Information About the SNA Database in the Gateway . . . 1–10
1.14.1 Defining the Channel-Attached Line 1–11
1.14.2 Defining Channel-Attached Circuits 1–12
1.14.3 Defining Physical Units 1–12
1.14.4 Defining Access Names 1–13
1.14.5 Defining Servers 1–14
1.15 Part 3: Information About the DECnet Database in the Gateway 1–14

2 Installing the Gateway-CT Software

2.1 DECnet/VAX Configuration 2–2
2.2 Files Installed 2–10

3 Configuring the Gateway-CT

3.1 DECnet/OSI Configuration Example 3–18

4 Loading the Gateway-CT Software

4.1 Before Loading the Software 4–2
4.2 Loading the Software on DECnet/VAX 4–4
4.3 Loading the Software on DECnet/OSI 4–7
4.4 Checking the Connection Between the Gateway Node and the Load Host 4–10

Index

Figures

1 Gateway-CT Manuals vii
1–1 DECnet/SNA Network with Multiple Gateways 1–2
1–2 Gateway-CT Configuration Worksheet, Part 1 1–8
1–3 Gateway-CT Configuration Worksheet, Part 2 1–11
1–4 Gateway-CT Configuration Worksheet, Part 3 1–15

Tables

1–1 Process Quotas for the Installing Account 1–5
4–1 Ethernet Line and Circuit Characteristics 4–2

Preface

The DECnet SNA Gateway for Channel Transport for OpenVMS (called the Gateway-CT in this manual) is a system of hardware and software that provides an interface between Digital Equipment Corporation and International Business Machines Corporation networks. Because the Gateway-CT can handle the different communications protocols between a Digital and an IBM® network, it enables certain nodes in a Digital DECnet™ network to communicate with one or more hosts in an IBM SNA network. The Gateway-CT provides an interface to the IBM network through a channel directly attached to the IBM host. The Gateway-CT software runs on either a DEC ChannelServer or a DEC ChannelServer II hardware platform.

Note

Throughout this manual, the hardware server box is generically referred to as the ChannelServer. Where differences occur, distinctions between the DEC ChannelServer and the DEC ChannelServer II are noted.

This manual explains how to install, configure, and load the Gateway Management and Gateway-CT software on an OpenVMS® host running OpenVMS VAX V5.4 or later, or OpenVMS AXP V1.5.

Intended Audience

This manual is written for DECnet system managers and network managers who install and configure Gateway-CT systems. This manual should be used with other Digital and IBM documentation.

New Features

This release of DECnet SNA Gateway for Channel Transport enables the loading of software from DECnet/OSI on OpenVMS, as of SNACSA V2.1 ECO3.

Figure 1 lists the Gateway-CT manuals according to the major tasks they describe. Arrows suggest the order for using the books. Highlighting indicates this manual.

Figure 1 Gateway-CT Manuals

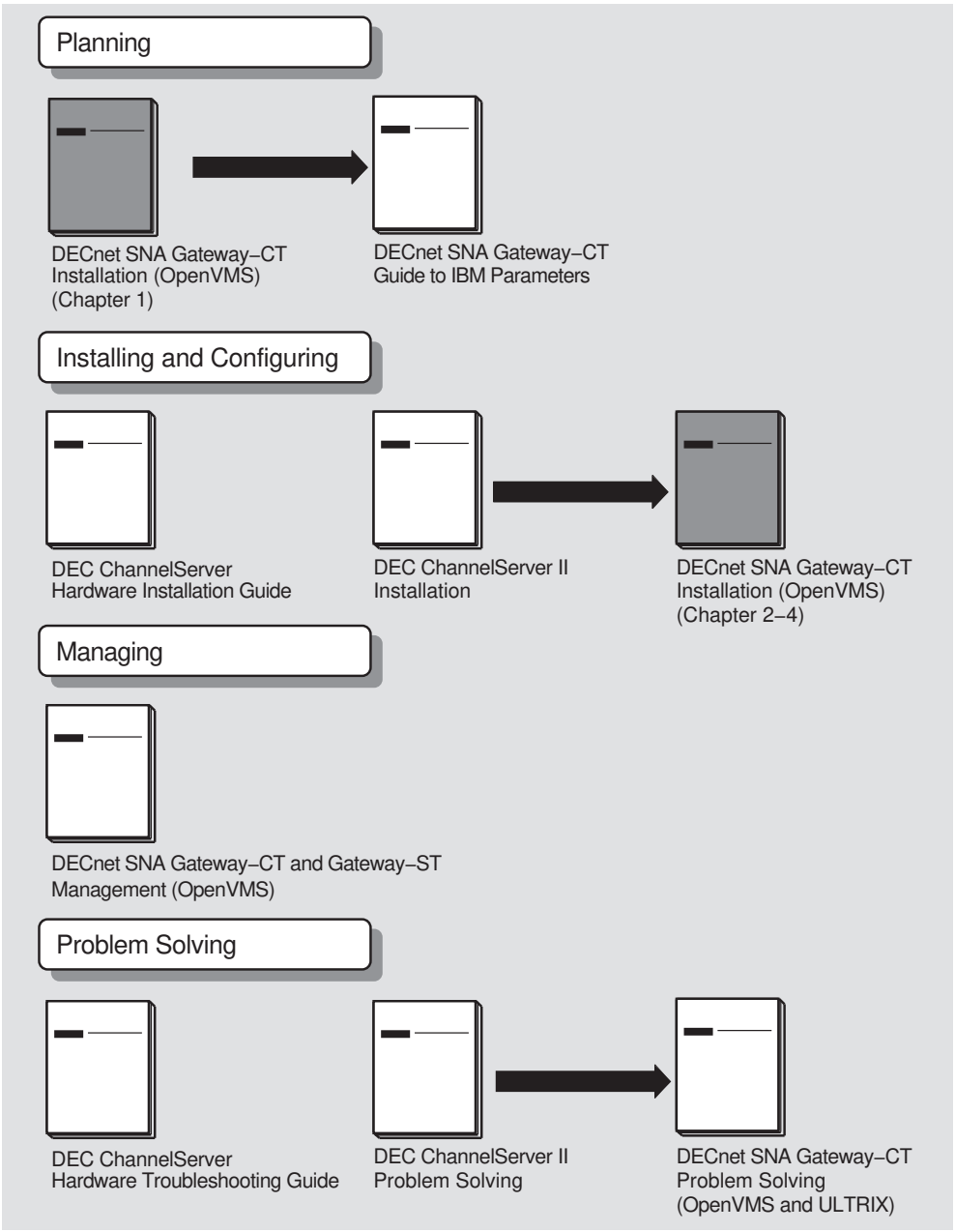

LKG–4932–93R

Digital Equipment Corporation provides access routine products that use the Gateway-CT to access IBM systems. Each access routine has its own manual or set of manuals.

You might find the following OpenVMS manuals helpful:

- *OpenVMS Networking Manual*
- *OpenVMS Network Control Program Manual*
- *OpenVMS Install Utility Manual*
- *OpenVMS System Messages and Recovery Procedures*
- *Guide to Maintaining an OpenVMS System*
- *Guide to OpenVMS System Security*
- *OpenVMS Authorize Utility Manual*
- *OpenVMS Network Control Language Manual*

Conventions

This manual uses the following conventions:

`SNANCP> SET LINE line-id`	In command examples, black monospaced type indicates system output. `Red` monospaced type indicates user input.
	Uppercase letters represent text that you must enter exactly as shown. Lowercase letters in italics represent variables for which you must substitute specific information.
Return	Unless otherwise specified, every command line is terminated by pressing the Return key.
Ctrl/*x*	This symbol indicates that you press and hold down the key labeled Ctrl while simultaneously pressing another key (for example, Ctrl/C or Ctrl/T).

When you issue NCP, NCL, and SNANCP commands, many component names, parameters, and qualifiers require additional information. In most cases, the syntax of this additional information follows a standard set of rules. (Exceptions to these rules are noted where appropriate.) All numeric values are in decimal form and range from 0 to 65,535 unless otherwise specified.

NCL, SNANCP, and NCP commands use the following conventions:

circuit-id
: A string of characters whose exact syntax is that for a DECnet or SNA circuit identification.

  On DECnet nodes, circuit identification takes the following form:

  dev-c

  where *dev* is a device name and *c* is a decimal number (0 or a positive integer) designating the device's hardware controller.

  Channel-attached circuits are identified by a string in the form CHAN-*n*, where *n* indicates the number of the circuit.

  On the Gateway node, the Ethernet circuit is identified by the string ETHERNET.

E-address
: A string of 12 hexadecimal digits, represented by 6 bytes separated by hyphens (for example, 08-00-2B-0A-6C-F3). The string indicates the Ethernet hardware address.

line-id
: A string of characters whose exact syntax is that for a DECnet or SNA line identification.

  On DECnet nodes, line identification takes one of the following formats:

  dev-c

  where *dev* is a device name and *c* is a decimal number (0 or a positive integer) designating the device's hardware controller.

  On the Gateway node, the Ethernet line is identified by the string ETHERNET.

  Channel-attached lines are identified as a string in the form CQ-*n*, where *n* indicates the number of the line.

node-address
: A numeric value ranging from 1.1 to 63.1023, composed of an area number to the left of the period followed by a node number to the right of the period. If the area number is not supplied, the area number of the executor node is used. The default area number for the executor is 1.

node-id
: Either a *node-name* or a *node-address*.

node-name
: A string of up to 6 alphanumeric characters containing at least 1 alphabetic character.

Abbreviations and Acronyms

The following abbreviations and acronyms are used throughout this manual:

DHCF	DECnet/SNA VMS Distributed Host Command Facility
LU	Logical unit
NCP	Network Control Program. Can refer to Digital's NCP or IBM's NCP. This manual uses NCP to refer to the Digital product and IBM NCP to refer to the IBM product.
NCL	Network Control Language
PU	Physical unit
RU	Request/response unit
SNA	IBM's Systems Network Architecture
SNANCP	DECnet SNA Gateway Network Control Program
UIC	User identification code
VAX	Any one of the systems listed in the Software Product Description (SPD) but not a particular system

1

Preparing for Installation and Configuration

The DECnet SNA Gateway for Channel Transport for OpenVMS is a system of hardware and software that handles protocol differences between IBM® SNA networks and Digital Equipment Corporation DECnet™ networks. DECnet SNA access routines use the Gateway-CT to access IBM subsystems, applications, and programs.

Gateway-CT V2.1 combines management software with the Gateway-CT software. There is no longer a separate process for installing these two software components. As part of the installation process, you are given the option of installing the management software as a separate entity; installing the Gateway-CT diagnostic software; or installing the entire software package, which includes the management, diagnostic, and load host software. This chapter describes the preparations you must make before you install and configure the Gateway-CT.

Note

This chapter deals with DECnet/VAX commands and examples, and these may be different for DECnet/OSI. See Section 3.1 and Section 4.3 for complete examples of a configuration and loading of the software on a DECnet/OSI system. Also, refer to the *DECnet/OSI NCL Reference Manual* for information on NCL commands.

Figure 1–1 shows a DECnet SNA network with multiple gateways.

Figure 1–1 DECnet/SNA Network with Multiple Gateways

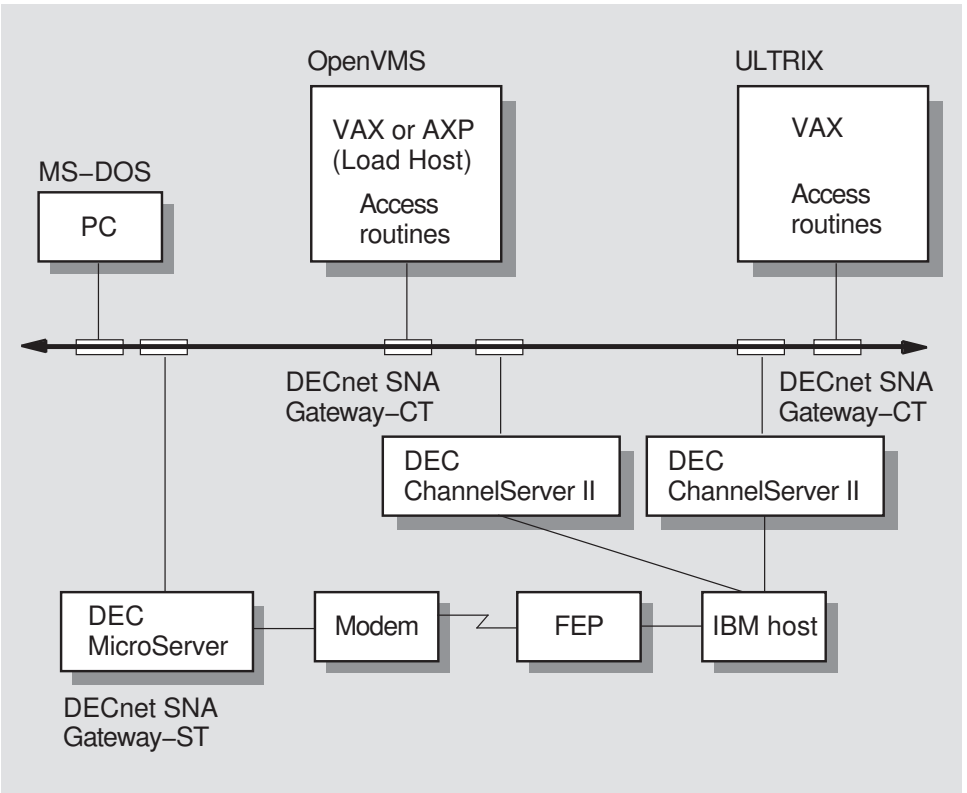

LKG–4139–93R

1.1 Inspecting the Distribution Kit

The Software Bill of Materials (BOM) included with your distribution kit specifies the contents of the distribution kit. Carefully compare the items you received with the items listed in the BOM. If any components are missing or damaged, contact Digital Equipment Corporation before continuing with the installation.

1.2 Preparing the IBM SNA Environment

You must prepare certain software components in the IBM environment before you can use the Gateway-CT software. The *DECnet SNA Gateway for Channel Transport Guide to IBM Parameters* explains which IBM parameters must be correctly defined for successful communication between the IBM host and your Gateway-CT. Chapter 3 explains how IBM parameter settings can affect parameter settings for various Gateway components.

You should view the Digital documentation as an adjunct to the IBM documentation; the IBM documentation remains the authoritative source for IBM software concepts and procedures.

Note

Since IBM system programmers reconfigure and generate their systems according to a set schedule, give them as much advance notice as possible to prepare for the Gateway-CT installation.

1.3 Identifying Where the Gateway-CT Software Will Be Installed

Before you install the Gateway-CT software, you must identify the DECnet nodes which will contain the software. A DECnet/SNA network with a Gateway-CT has the following DECnet nodes:

- **Gateway node:** A DEC ChannelServer II or a DEC ChannelServer running the Gateway-CT software.
- **Gateway load host node:** A DECnet for OpenVMS node from which you load the Gateway-CT system image onto the Gateway node. You must install both the management and the Gateway-CT software on the load host node.

  In environments where reliability is critical, you should install the entire Gateway-CT software kit (installation option 3) on at least one additional load host. The second load host can then load the software onto the Gateway if the first load host is unavailable. The second load host can also be used to receive dumps from the Gateway. Any DECnet node that is running OpenVMS VAX V5.4 or later, or OpenVMS AXP V1.5, and is connected to the same Ethernet as the Gateway can be used as a load host.

- **Access node:** A DECnet node with one or more access routine products. The access node must be running the version of the operating system software (OpenVMS®, ULTRIX®, or MS–DOS®) required by the access routine.

1.4 Verifying Required Disk Space

Installing the Gateway-CT kit requires 4800 free blocks on the system disk. If you want just the management software, you still require 4800 free blocks for the installation, but only 1700 blocks are allocated after the installation is completed. Use the SHOW DEVICE command to check available disk space.

The Gateway-CT software supports OpenVMS tailoring for installation on systems that have limited system disk space. The Gateway-CT Software Product Description (SPD) explains OpenVMS tailoring and lists the necessary OpenVMS system classes. The OpenVMS SPD provides more information on classes and OpenVMS tailoring.

1.5 Verifying Necessary Privileges

To install Gateway-CT, you must be logged in to an account that has SYSPRV. Use the SHOW PROCESS/PRIVILEGES command to check privileges.

For DECnet/OSI, you must also grant the NET$MANAGE rights identifier to the account from which the configuration SNACSA$CONFIGURE.COM is being performed. The procedure will prompt you for this, and will not run until the identifier is granted.

1.6 Verifying Required Process Account Quotas

To install Gateway-CT, the account you use must have sufficient quotas. Table 1–1 summarizes the required process quotas.

Table 1–1 Process Quotas for the Installing Account

Requirements	Specifications	
	VAX	AXP
Software	OpenVMS VAX V5.4 or later DECnet/VAX or DECnet/OSI	OpenVMS AXP V1.5 and DECnet for OpenVMS V1.5A
Privileges	System manager level	
Disk Space	5250 blocks	5250 blocks
Process Quota Values	ASTLM = 24 BIOLM = 18 BYTLM = 18000 DIOLM = 18 ENQLM = 30 FILLM = 20	24 18 18000 18 30 20
Approximate Installation Time	15 to 30 minutes depending on the type of medium used and the system configuration	
Associated Documents	The OpenVMS software installation guide for your particular processor	

Use the OpenVMS Authorize Utility (AUTHORIZE) to compare the current values of these quotas with the requirements for installing Gateway-CT. The following example uses the SYSTEM account:

```
$ SET DEFAULT SYS$SYSTEM Return
$ RUN AUTHORIZE Return
UAF> SHOW SYSTEM Return
```

To change the values of these quotas, use the OpenVMS Authorize Utility's MODIFY command. For more information, see the *OpenVMS System Manager's Manual*.

1.7 Verifying the Required OpenVMS Version

Your OpenVMS system must be running either OpenVMS VAX V5.4 or OpenVMS AXP V1.5. Use the SHOW SYSTEM command to determine the current version. If you do not have the required version, you must install it before you install the Gateway-CT software. The *OpenVMS System Manager's Manual* explains how to install OpenVMS software.

1.8 Installing DECnet SNA OpenVMS Access Routines

DECnet SNA OpenVMS access routines allow you to communicate with programs running on the IBM system. Each access routine is installed separately. This manual provides instructions for installing the Gateway-CT software only. The SPD for Gateway-CT provides a complete list of access routines.

1.9 Backing Up Your System Disk

Before you start an installation that involves writing to your system disk, Digital Equipment Corporation recommends that you make a backup copy of your system disk. The *OpenVMS System Manager's Manual* explains how to back up your system disk.

1.10 Checking Required OpenVMS and DECnet Files

The installation process checks that NETPROXY.DAT and RIGHTSLIST.DAT exist on your system. These files must reside in SYS$SYSTEM or you need to define system logical names that point to their locations. If the files do not exist, the installation procedure asks if you want to create them. Respond Yes to these prompts if they appear.

If SYSUAF.DAT does not exist on your system, the installation will fail.

1.11 Configuration Considerations

When the load host is a member of an homogeneous VMScluster™, you must execute at least Part 1 of the Gateway-CT configuration procedure on the load host node itself. If more than one cluster member will be used as a load host, then you must execute Part 1 on each load host. This is necessary because the load host's DECnet SERVICE CIRCUIT parameter (in the DECnet for OpenVMS definition of the Gateway node) is hardware dependent.

To have a distinct Gateway node definition for each cluster member, the DECnet for OpenVMS remote node name database (NETNODE_REMOTE.DAT) must be located in the system-specific directory. DECnet for OpenVMS is configured this way by default.

Only Part 1 of the configuration procedure needs to be executed on each load host. Parts 2 and 3 need only be executed once since they simply create files that are located in the common directory.

1.12 Preparing for the Configuration

After you install the Gateway-CT software on the load host, you configure the Gateway-CT system by running SNACSA$CONFIGURE.COM, a command procedure that generates the initial configuration by performing the following steps using default information and information you provide:

- **Part 1:** Defines the Gateway node in the load host's DECnet database.
- **Part 2:** Creates a command file that configures the SNA database in the Gateway.
- **Part 3:** Creates a command file that configures the DECnet database in the Gateway.

1.13 Part 1: Information About the Gateway Definition in the Load Host

In Part 1 of the configuration procedure, you define information about the Gateway node in the DECnet database on the load host. This information is used for loading and dumping. This part of the configuration also defines the SNAINI object and creates a proxy account for the Gateway-CT initialization. The proxy account maps the remote username, *gateway_name*::SNA$GO, to the local username, SNA$CSV.

Note

If you are upgrading the Gateway-CT software (not performing the initial installation), you only need to complete Part 1 of the configuration to change the Gateway load file. The procedure will determine the current settings and display those settings as the defaults.

Figure 1–2 shows Part 1 of the Gateway-CT Configuration Worksheet.

Figure 1–2 Gateway-CT Configuration Worksheet, Part 1

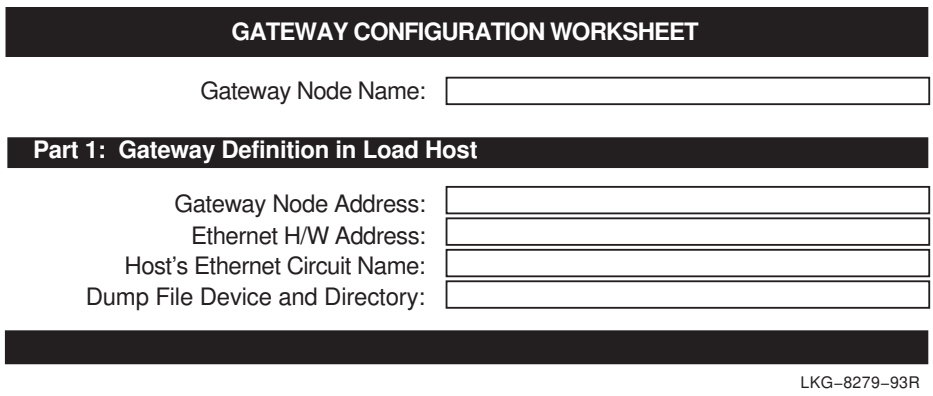

The sections that follow explain the information you need to record in Part 1 of the worksheet.

Gateway Node Name

This is the name of the Gateway-CT node (1 to 6 alphanumeric characters). The name must be unique within the DECnet network.

Gateway Node Address

This is the DECnet address of the Gateway node in the format *aa.nnnn* where *aa* is the (optional) DECnet area number ranging from 1 to 63 (decimal) and *nnnn* is the DECnet node number ranging from 1 to 1023 (decimal). The address must be unique within the DECnet network.

Ethernet Hardware Address

The Ethernet hardware address of the Ethernet port for the Gateway node. Enter this address either as 12 hexadecimal digits or as six pairs of hexadecimal digits separated by hyphens. For example, the following expressions specify the same address:

08002B08CCB3 or 08-00-2B-08-CC-B3

If this is a new node or if the Ethernet controller in the node has been changed, you can find the address on the label on the DELQA or the DESQA (on the back of the DEC ChannelServer or the DEC ChannelServer II, respectively). You can also find the address for both the DEC ChannelServer and the DEC ChannelServer II by entering the following at the console prompt:

```
>>>E/P/W/N:5 20001920
  P 20001920 FF08
  P 20001922 FF00
  P 20001924 FF2B
  P 20001926 FF0F
  P 20001928 FF5B
  P 2000192A FF96
>>>
```

You derive the Ethernet address by taking the last two hexadecimal digits of the lines displayed (08-00-2B-0F-5B-96 in the example).

In addition, you can find the address for the DEC ChannelServer II by entering the following at the console prompt:

```
>>>SHOW ETHERNET
Ethernet Adapter 0 (774440)
-XQA0 (08-00-2B-0F-5B-96)
>>>
```

Note

The SHOW ETHERNET command works with the DEC ChannelServer II only.

Host's Ethernet Circuit Name

The name of the Ethernet circuit that connects the load host to the Gateway-CT. The Gateway node makes service requests for loading and dumping on this circuit.

Enter the circuit-id for this node using the syntax *dev-c* where *dev* is the Ethernet controller type (QNA, BNA, SVA, etc.) and *c* is a decimal number (0 or a positive integer) that designates the hardware controller number for the device.

Dump File Device and Directory

The device and directory on the load host which will contain the dump file should the Gateway node perform an up-line dump. The dump file is not created until it is required.

The default device and directory is SYS$COMMON:[SNA$CSV]. Ensure that the specified device always has enough free space for the dump file. The size of your Gateway's dump file can vary depending on your hardware platform (amount of memory your system has):

- If you have a DEC Channelserver (with 5 megabytes of memory), the dump file can be a maximum of 10,240 blocks.
- If you have a DEC Channelserver II (with 16 megabytes of memory), the dump file can be a maximum of 32,768 blocks.

If there is insufficient space on the specified device, the system issues a warning message.

1.14 Part 2: Information About the SNA Database in the Gateway

In Part 2 of the configuration procedure, you define the following Gateway components:

- Lines
- Circuits
- Physical units (PUs)
- Access names
- Servers

Figure 1–3 Gateway-CT Configuration Worksheet, Part 2

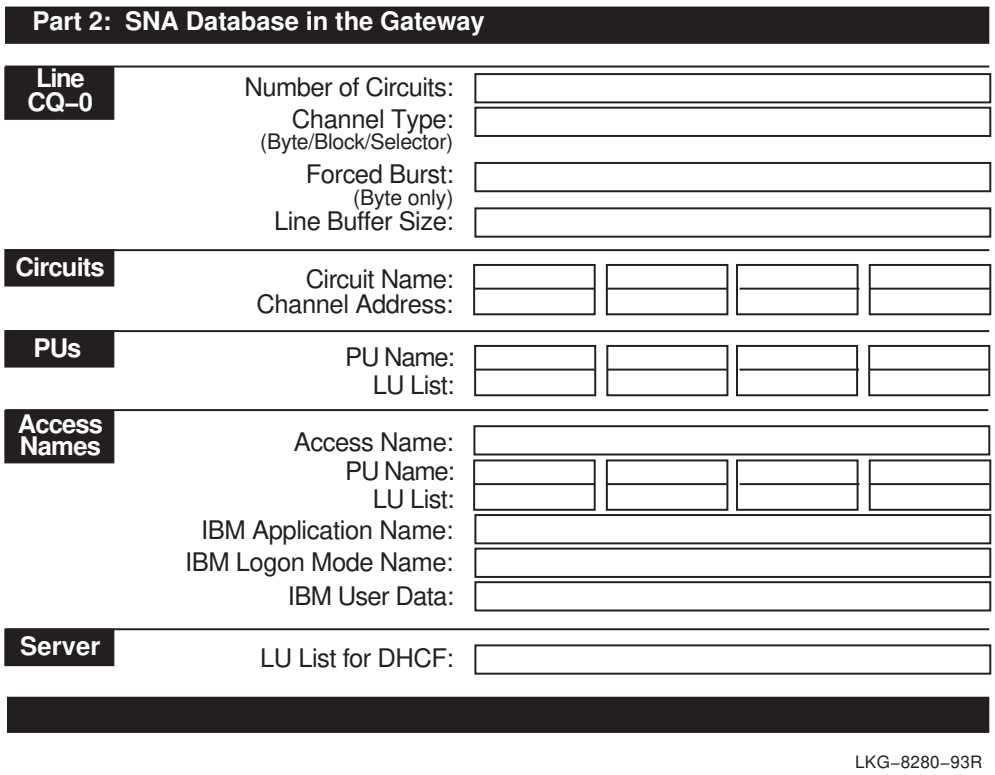

Figure 1–3 shows Part 2 of the Gateway-CT Configuration Worksheet.

The sections that follow explain the information you need to record in Part 2 of the worksheet.

1.14.1 Defining the Channel-Attached Line

The information in this section defines the channel-attached line, CQ-0.

Number of Circuits

The number of circuits to be configured for the line. Each circuit corresponds to a channel address on the line; you should specify the same number of circuits as there are channel addresses defined on the IBM side for this line. The default is 1.

Channel Type

The type of channel used. The channel type can be byte multiplexer, block multiplexer, or selector. Ask your IBM system programmer for the type of channel to specify. The default is block multiplexer.

Forced Burst

The type of transfer mode used on a byte multiplexer channel. Enter Y if forced-burst mode is to be enabled for the line or N if forced-burst mode is to be disabled. This information is only required if you specify a byte multiplexer channel.

Line Buffer Size

The maximum size of buffers used to receive request/response units (RUs) transmitted by the IBM host. Determine the buffer size by adding 9 bytes to the maximum RU size the IBM host will send to the Gateway. The default is 8201 which allows RUs up to 8192 bytes. Maximum buffer size is 8250 bytes.

1.14.2 Defining Channel-Attached Circuits

Information in this section is used to define each channel-attached circuit.

Circuit Name

The circuit name in the format CHAN-*n* where *n* is an integer ranging from 1 to 4.

Channel Address

The channel address of the Gateway-CT specified as three hexadecimal digits. Obtain the channel address from your IBM system programmer. There is no default channel address.

1.14.3 Defining Physical Units

The information in this section defines the PU for each channel-attached circuit; you define one PU for each circuit. Physical units (PUs) provide the SNA physical unit services for the Gateway node.

LU list

The logical units (LUs) that are defined for the PU. Specify the available LU addresses as a list of decimal number ranges from 1-255. For example, define LUs 1 through 75, LUs 101 through 200, and LU 215 as follows:

```
1-75,101-200,215
```

DECnet/SNA access routines can use only those LUs defined in the list. Any request for communication with an LU not in the list will be rejected. Also, the LUs listed must correspond with the LU addresses defined in the LOCADDR parameter for the IBM ACF/VTAM LU macro; your IBM system programmer can supply you with these addresses.

1.14.4 Defining Access Names

The information in this section is used to define access names. Access names are a convenient way to pass information about the type of session being requested when an LU-LU session is being established. *DECnet SNA Gateway for Channel Transport and Gateway for Synchronous Transport Management (OpenVMS)* explains access names in greater detail.

The following information should be completed for each access name that you want to define.

Access Name

The access name specified as 1 to 16 alphanumeric characters; for example, CICS.

PU Name

The PU used to access the IBM system. Enter the PU in the format SNA-*n*, for example, SNA-0. You can define more than one PU per access name. You are required to enter at least one PU per access name.

LU List

The list of LUs, for a given PU, that can use this access name. When setting an LU list for the access name, you must first specify a particular PU. Enter a list of numbers or number ranges separated by commas. For example, the following list specifies LUs 1 through 50, LUs 100 through 150, and LU 160:

```
1-50,100-150,160
```

IBM Application Name

The name of the IBM application for the access name. Enter 1 through 8 alphanumeric characters. Sessions established with this access name connect to the designated IBM application. If you need to specify this parameter, ask the IBM system programmer for the name.

IBM Logon Mode Name

The IBM ACF/VTAM Logon Mode Table entry that is used at the start of each session. Enter 1 through 8 alphanumeric characters. The Logon Mode Table entry can specify the protocol rules for the session. If you specify no logon mode name, the default entry for the LU address, as defined on the IBM

system, is used. The name should correspond with the operand label of an IBM ACF/VTAM MODEENT macro.

IBM User Data
An optional string of user data, which will be passed to the session partner. Enter 1 through 32 characters. The format of the data is specific to the IBM application acting as the session partner. Check with the IBM system programmer for the requirements of this field.

1.14.5 Defining Servers

The information in this section is used to define the DHCF server.

The system automatically defines all parameters for the SNA-ACCESS and RJE servers. The configuration procedure will also define all parameters for the DHCF server except for the LU list information.

LU List for DHCF
A list of LUs to be allocated to the DHCF server. Enter a list of numbers or ranges separated by commas, for example, 20–30.

1.15 Part 3: Information About the DECnet Database in the Gateway

In Part 3 of the configuration procedure you provide information for the DECnet database in the Gateway-CT, which initializes the DECnet database components in the Gateway-CT each time the gateway is loaded. You can edit this file to customize your configuration.

Each time the Gateway software is loaded, the Gateway node performs the following steps to initialize the database:

- Reads all the nodes defined in the DECnet database on the load host.
- Selects the nodes that are in its area (that is, nodes that have the same DECnet area number as the Gateway node).
- Defines all the nodes in the same DECnet area in the Gateway node's DECnet database.
- Requests that the load host execute the command procedure that is created in this part of the configuration procedure. This file specifies the privileged username and password for access control of the Gateway-CT.

Figure 1–4 shows Part 3 of the Gateway-CT Configuration Worksheet.

Figure 1–4 Gateway-CT Configuration Worksheet, Part 3

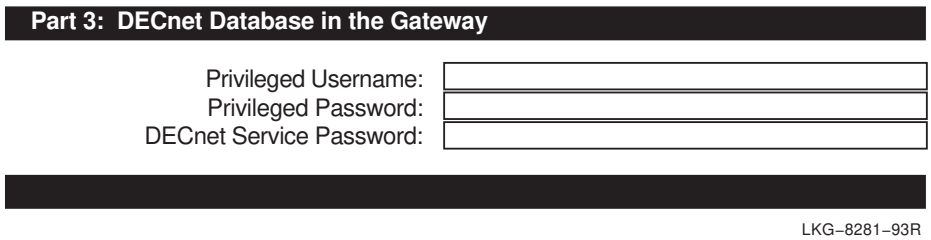

The sections that follow explain the information you need to record in Part 3 of the worksheet.

Privileged Username and Privileged Password

The privileged username and password (both 1-16 alphanumeric characters in length) that control access to the following Gateway functions:

- NCP CLEAR, LOOP, SET, and ZERO commands
- SNANCP CLEAR, LOOP, SET, SHOW LU (for authorization information), and ZERO commands
- NETTRACE commands
- SNATRACE commands

DECnet Service Password

The password required to trigger the bootstrap mechanism on the target node. The password can be up to 16 hexadecimal digits. For Ethernet circuits, the password ranges from
0 to FFFFFFFFFFFFFFFF. If you choose the default, no password is set.

Note

Digital Equipment Corporation recommends that you select a service password that is at least 6 hexadecimal digits long.

2

Installing the Gateway-CT Software

This chapter explains how to install the Gateway-CT software for DECnet/VAX. Make sure you install the required hardware and software and prepare the IBM SNA environment before you begin the installation.

The procedure for installing files on an OpenVMS system is automated. You simply answer questions displayed while the procedure (VMSINSTAL) runs. Most questions require a simple yes or no answer. The Gateway-CT installation should take no longer than 15 minutes, depending on the type of medium you use. The estimated installation time does not include preparation time.

The following illustration shows how the installation information is presented.

LKG–8311–93R

Default answers appear in brackets throughout the installation procedure. Press Return to accept a default answer. Press Ctrl/Y to abort the installation procedure at any time; later, you can restart the installation at ❷.

2.1 DECnet/VAX Configuration

```
Username: SYSTEM    Return  ❶
Password: password  Return
$ SET DEFAULT SYS$UPDATE  Return
$ @VMSINSTAL SNACSA021 ddcu: [OPTIONS N] Return  ❷

      OpenVMS Alpha Software Product Installation Procedure V1.5

It is dd-mmm-yyyy at hh:mm.
Enter a question mark (?) at any time for help.

%VMSINSTAL-W-ACTIVE, The following processes are still active:
   JONES
* Do you want to continue anyway [NO]?  ❸

* Are you satisfied with the backup of your system disk [YES]?  ❹

The following products will be processed:
  SNACSA V2.1

    Beginning installation of SNACSA V2.1 at hh:mm

%VMSINSTAL-I-RESTORE, Restoring product saveset A...

Release notes included with this kit are always copied to SYS$HELP.

Release Notes Options:

    1. Display release notes
    2. Print release notes
    3. Both 1 and 2
    4. None of the above
* Select option [2]:  ❺

* Queue name [SYS$PRINT]:
Job SNACSA021 (queue SYS$PRINT, entry 142) started on LPA0
```

❶ Digital Equipment Corporation recommends that you install software from the system manager's account [SYSTEM] with your default device and directory set to SYS$UPDATE.

❷ VMSINSTAL prompts you if you do not supply the product and device names. If you want to be prompted for the product name, device name, and installation options, type the following:

```
$ @SYS$UPDATE:VMSINSTAL Return
```

***ddcu*:**
A device name where the distribution kit will be mounted for the Gateway-CT installation media, where *dd* is the device, *c* is the controller, and *u* is the unit number. It is not necessary to use the console drive to install Gateway-CT.

OPTIONS N
Specifying this optional parameter allows you to display or print the release notes. If you do not include the OPTIONS N parameter (excluding the brackets), VMSINSTAL copies the release notes to SYS$HELP. VMSINSTAL also provides several other options. For more information on options, see your processor-specific installation/operations guide.

❸ If users are logged in, you are asked whether you want to continue the installation. To continue, type YES and press Return. To stop the installation, press Return.

❹ Before you proceed with the installation, make sure you have a good backup copy. If you are satisfied with the backup of your system disk, press Return. If you do not have a good backup copy, type NO and press Return to end the installation.

❺ This step applies only if you specified OPTIONS N at ❷.

If you select option 1, VMSINSTAL displays the release notes. Press Ctrl/C to terminate the display.

If you select option 2, VMSINSTAL prompts you for a queue name. Either type a queue name and press Return or press Return to send the file to the default output print device.

If you select option 3, VMSINSTAL displays the release notes and then prompts you for a queue name.

If you select option 4, VMSINSTAL does not display or print the release notes.

```
* Do you want to continue the installation? ❻

%VMSINSTAL-I-RELMOVED, Product release notes have been moved to SYS$HELP.


        You can install:

        [1] The gateway management utilities
        [2] The DEC ChannelServer II diagnostic software
        [3] The entire Gateway-CT kit (including management and diagnostics)

* Enter an option [3]:  Return  ❼

* Do you want to start the event logger on this node [YES]?  Return  ❽

  Add the following command to your system startup procedures:

   $ @SYS$STARTUP:SNAGM$STARTUP  ❾

  You can edit SNAG$STARTUP.COM if you wish to change whether or not
  the DECnet SNA Event Logger is run on this node or cluster.  ❿
```

❻ To continue the installation, type YES and press Return. If you type NO and press Return, VMSINSTAL moves the release notes to SYS$HELP and ends the installation.

❼ You have three installation options. The default selection, (3), installs the complete Gateway-CT software kit, including management and diagnostics. To start this process, press Return. This option requires that the product authorization key (PAK) be registered and loaded. Failure to do this causes the installation process to fail with an error message notifying you that the license must be installed. Refer to the PAK installation procedure in Chapter 1 for details. After registering and loading the PAK, restart the installation from step ❷.

If you want to install just the Gateway management software, enter 1, press Return, and proceed with the remainder of the installation procedure.

If you want to install just the DEC ChannelServer II diagnostic software, enter 2 and press Return. If you select option 2, the following messages display:

```
%VMSINSTAL-I-MOVEFILES, Files will now be moved to
                        their target directories...

        Installation of SNACSA V2.1 completed at 15:54

        VMSINSTAL procedure done at hh:mm
```

❽ At this prompt, press Return to start event logging. If you want to manually start event logging later, type NO and press Return. Because the event logger must be running for a DECnet node to log SNA Gateway event messages, Digital recommends that you start the event logger at this time.

❾ Add this command to your system startup file so that event logging and NETTRACE begin automatically at system startup.

❿ If you responded NO to the prompt at item ❽, the event logger command in SNAGM$STARTUP.COM is disabled. To enable the command at a later time, edit SNAGM$STARTUP.COM in SYS$STARTUP, and remove the exclamation point (!) from in front of the following command:

```
$ @SYS$STARTUP:SNAGM$EVL_STARTUP
```

```
* This product needs a DECnet proxy login database (NETPROXY)
* Do you want to create NETPROXY.DAT [YES]?  ⓫

* This product needs a rights database (RIGHTSLIST)
* Do you want to create RIGHTSLIST.DAT [YES]?  ⓬

A directory and account must be created for use by the
Gateway. This account allows only network logins,
and is used by the Gateway for execution of initialization
procedures.  The account details are as follows:

      Directory: SYS$COMMON:[SNA$CSV]
      Username:  SNA$CSV
      Password:  randomly generated
      UIC:       specified by you

* UIC for SNA$CSV account [56,56]:  ⓭

%VMSINSTAL-I-ACCOUNT, This installation creates an account named SNA$CSV.
%UAF-I-ADDMSG, user record successfully added
%UAF-I-RDBADDMSGU, identifier SNA$CSV value: [000056, 000056] added to
                   RIGHTSLIST.DAT
%VMSINSTAL-I-ACCOUNT, This installation updates an ACCOUNT named SNA$CSV.
%UAF-I-MDFYMSG, user record(s) updated
%VMSINSTAL-I-SYSDISK, This product creates system disk directory
                      VMI$ROOT:[SNA$CSV].  ⓮

You will be prompted to run the IVP as part of this installation, but
you may also manually invoke the IVP at any time by issuing the command:

        $ @SYS$TEST:SNACSA$IVP

* Do you want to run the IVP after the installation [YES]?  ⓯

* Do you want to purge files replaced by this installation [YES]?  ⓰
```

⓫ If this option displays, the file NETPROXY.DAT, which contains the proxy login entries that allow remote users access to your system, does not exist. Press Return to create this file. Type NO and press Return and the installation ends; no software is installed.

The configuration procedure uses NETPROXY.DAT to create a proxy for the Gateway account.

⓬ If this option displays, RIGHTSLIST.DAT does not exist. Press Return and the system creates the file. Type NO and press Return and the installation ends; no software is installed.

RIGHTSLIST.DAT is a collection of data that the system maintains and uses to define and associate identifiers with the holders of those identifiers.

⓭ You are prompted for a UIC only if the account does not exist. If the account already exists, the system displays the following:

```
%SNACSA-I-USREX, username SNA$CSV already exists -
                 UIC [56,56]
```

If no UIC exits for SNA$CSV, you are prompted to supply one; a default account of [56,56] is provided. If this is acceptable, press Return. You can specify a different UIC if you choose, but ensure that you specify a unique UIC (not a system UIC and not one that is in a group with other UICs).

⓮ A directory and an account are created for the configuration files. If the directory SYS$COMMON:[SNA$CSV] already exists, the Gateway-CT uses the existing directory. If the directory SYS$COMMON:[SNA$CSV] does not exist, it is created during the installation procedure.

⓯ The installation verification procedure (IVP) runs tests to check whether the installation procedure was successful. Press Return to run the IVP after the installation. If you do not want to run the IVP, type NO and press Return.

⓰ The system disk might contain previous versions of the Gateway-CT files. The files are replaced during installation with new files, but the old files are not automatically purged. Digital recommends purging. Press Return to purge the files, or type NO and press Return to retain them.

Note

System images from previous versions of the Gateway-CT will NOT be deleted during the installation procedure.

```
No more questions...  ⓱

To create the initial configuration files for your Gateway, invoke
the following configuration procedure, thus:

        $ @SYS$MANAGER:SNACSA$CONFIGURE

If this is an update to a previous version, invoke the above configuration
procedure and execute Part 1 of the procedure only.  This will define the
Gateway node in the load host's DECnet database but leave the Gateway's
DECnet and SNA configuration files unchanged.


%VMSINSTAL-I-MOVEFILES, Files will now be moved to their target directories...


DECnet SNA Gateway-CT V2.1
Installation Verification Procedure.

The IVP checks that the directory SYS$COMMON:[SNA$CSV] was
successfully created, that all Gateway-CT files have been correctly
installed from the kit, that NETPROXY.DAT and RIGHTSLIST.DAT exist,
and that the username SNA$CSV was correctly set up.

Executing the IVP ...  ⓲
Directory ok  ...

Management Files ok ...
Gateway files ok...
Username ok ...

IVP for DECnet SNA Gateway-CT V2.1 completed successfully.


        Installation of SNACSA V2.1 completed at hh:mm


        VMSINSTAL procedure done at hh:mm  ⓳

$ LOGOUT  ⓴
SYSTEM     logged out at dd-mmm-yyyy hh:mm
```

⓱ No more input is required. If you pressed Return in response to the prompt at ⓰, previous file versions are now purged.

If the installation procedure is successful, the executable files are moved to their target directory.

⓲ If you pressed Return in response to the prompt at ⓯, the installation procedure now calls the IVP to verify that the Gateway-CT software was successfully installed.

If the installation procedure or IVP fails for any reason, the following message is displayed:

```
%VMSINSTAL-E-INSFAIL, the installation of SNACSA V2.1
                      has failed.
```

Errors can result if any of the following conditions are true:

- The VMS operating system version is not V5.4
- The Product Authorization Key was not registered and loaded
- Disk quotas are insufficient
- Process quotas are incorrect

The *OpenVMS System Manager's Manual* explains error messages generated by these conditions.

If you are notified that any of these conditions exist, you should take the action described in the message. You might need to change a system parameter, increase an authorized quota value, or register and load the PAK.

If an IVP failure causes the installation to fail, contact Digital Customer Service.

⓳ When the installation procedure is complete, you can continue to install more products or end the installation procedure. To end the procedure, press Ctrl/Z or Return.

⓴ VMSINSTAL deletes or changes entries in the process symbol tables during the installation. Therefore, if you are going to continue using the system manager's account and want to restore those symbols, you should log out and log in again.

2.2 Files Installed

If you select option 3, the VMSINSTAL procedure for the Gateway-CT creates the SNA$CSV account and the [SNA$CSV] directory. VMSINSTAL also installs or modifies the following files:

- SYS$HELP:SNANCP.HLB
  SNANCP HELP library
- SYS$HELP:SNATRACE.HLB
  SNATRACE HELP library
- SYS$HELP:SNATRACEHLP.HLB
  NETTRACE HELP library
- SYS$LIBRARY:NETTRACE$KEY.INIT
  NETTRACE Key definitions
- SYS$LIBRARY:NETTRACE$CHAN_ANALYZE.EXE
  NETTRACE channel trace analyzer
- SYS$LIBRARY:NETTRACE$SDLC_ANALYZE.EXE
  NETTRACE SDLC trace analyzer
- SYS$LIBRARY:NETTRACE$PU_ANALYZE.EXE
  NETTRACE PU trace analyzer
- SYS$LIBRARY:NETTRACE$ETHERNET_ANALYZE_TV.EXE (AXP only)
  NETTRACE ETHERNET trace analyzer
- SYS$LIBRARY:NETTRACE$ETHERNET_ANALYZE_TV.IIF (AXP only)
  NETTRACE ETHERNET trace analyzer
- SYS$LIBRARY:NETTRACE$ETHERNET_ANALYZE.EXE (VAX only)
  NETTRACE ETHERNET trace analyzer
- SYS$LIBRARY:NETTRACE$NSP_ANALYZE_TV.EXE (AXP only)
  NETTRACE NSP trace analyzer
- SYS$LIBRARY:NETTRACE$NSP_ANALYZE.IIF (AXP only)
  NETTRACE NSP trace analyzer
- SYS$LIBRARY:NETTRACE$NSP_ANALYZE.EXE (VAX only)
  NETTRACE NSP trace analyzer
- SYS$LIBRARY:NETTRACE$SNATRAPRE.MAR
  Translation table prefix file
- SYS$LIBRARY:SNATRATBL.MAR
  Translation table template

- SYS$MANAGER:NETTRACE_INSTALL.COM
  Command procedure for starting NETTRACE
- SYS$MESSAGE:NETTRACE_MESSAGES_TV.EXE (AXP only)
  NETTRACE message file
- SYS$MESSAGE:NETTRACE_MESSAGES.IIF (AXP only)
  NETTRACE message file
- SYS$MESSAGE:NETTRACE_MESSAGES.EXE (VAX only)
  NETTRACE message file
- SYS$MESSAGE:SNAEVLMSG.EXE
  SNAEVL message file
- SYS$MESSAGE:SNANCPMSG.EXE
  SNANCP message file
- SYS$MESSAGE:SNAPMSG.EXE
  SNAP message file
- SYS$MESSAGE:SNATRCMSG.EXE
  SNATRACE message file
- SYS$STARTUP:SNAGM$EVL_STARTUP.COM
  Command procedure for starting SNAEVL
- SYS$STARTUP:SNAGM$STARTUP.COM
  Gateway Management startup procedure
- SYS$SYSTEM:NETLTC_TV.EXE (AXP only)
  NETTRACE trace collector image
- SYS$SYSTEM:NETLTC.EXE (VAX only)
  NETTRACE trace collector image
- SYS$SYSTEM:NETTRACE_TV.EXE (AXP only)
  NETTRACE utility
- SYS$SYSTEM:NETTRACE.EXE (VAX only)
  NETTRACE utility
- SYS$SYSTEM:SNAEVL.EXE
  SNA event logging program
- SYS$SYSTEM:SNANCP.EXE
  SNA network control program
- SYS$SYSTEM:SNAP.EXE
  SNAP utility

- SYS$SYSTEM:SNATRACE.EXE
  SNATRACE utility
- SYS$COMMON:[SNA$CSV]SNACSA021.SYS
  Gateway system image
- SYS$COMMON:[SNA$CSV]SNACSA021.STB
  Gateway symbol table
- SYS$HELP:SNACSA021.RELEASE_NOTES
  Gateway-CT Release notes
- SYS$COMMON:[MOM$SYSTEM]SNACSA$DESNX.SYS
  DEC ChannelServer II diagnostic image
- SYS$COMMON:[MOM$SYSTEM]SNACSA$MDM.SYS
  DEC ChannelServer II diagnostic image
- SYS$MANAGER:SNACSA$CONFIGURE.COM
  Gateway configuration procedure
- SYS$HELP:SNACSA$CONFIGURE.TLB
  Configuration help text
- SYS$TEST:SNACSA$IVP.COM
  Installation verification procedure
- SYS$COMMON:[SNA$CSV]SNAINI.COM
  Gateway initialization procedure

Note

SNAINI.COM is reserved for Digital use only. Do not attempt to modify this file to include site-specific startup procedures.

Note

This section deals with DECnet/VAX commands and examples, and these may be different for DECnet/OSI. See Section 3.1 and Section 4.3 for complete examples of a configuration and loading of the software on a DECnet/OSI system. Also, refer to the *DECnet/OSI NCL Reference Manual* for information on NCL commands.

3
Configuring the Gateway-CT

This chapter explains how to configure the Gateway-CT software. Make sure you complete the Gateway-CT Configuration Worksheet (see Preparing for the Configuration in Chapter 1) before you begin.

After you install the Gateway-CT software on the load host, you configure the Gateway-CT system by running SNACSA$CONFIGURE.COM. This command procedure helps you with the initial configuration by defining the Gateway node in the load host's DECnet database and by creating command files that configure the SNA and the DECnet databases in the Gateway. The configuration should take no longer than 15 minutes, excluding preparation time.

The following illustration shows how to use the information in this chapter:

LKG–8311–93R

Default answers appear in brackets throughout the procedure. Press Return to accept the default.

```
$ @SYS$MANAGER:SNACSA$CONFIGURE  Return

     CONFIGURE V2.1
     DECnet SNA Gateway-CT configuration procedure.

    Configuration is divided into three parts:

     .     Part 1: Define the Gateway node in the load host's
                   DECnet database.

     .     Part 2: Create a command file that will be used to
                   configure the SNA database in the Gateway
                   each time it is loaded.

     .     Part 3: Create a command file that will be used to
                   configure the DECnet database in the Gateway
                   each time it is loaded.

    This configuration procedure prompts you to see if you want
    to run each of the three parts.  All parts must be completed
    before the Gateway can be loaded. Enter "?" at any time for
    help.

DECnet SNA Gateway-CT node name [] :STAR  Return  ❶

================================================================================
  Part 1: Define the Gateway node in the load host DECnet database
================================================================================

Define the Gateway node in MIEMAT's DECnet database? (Y|N) [Y] :  ❷

DECnet node address of STAR (aa.nnnn) [4.752] :  ❸
Ethernet hardware address (12 hex digits) [08-00-2B-08-CC-B3] :  ❹
Device and directory for dump file [SYS$COMMON:[SNA$CSV]] :  ❺
Host's Ethernet circuit name (circuit-id) [BNA-0] :  ❻

       All questions for this section have been answered.
```

❶ Enter the Gateway node name (1 to 6 alphanumeric characters) and press Return. The name must be unique within the DECnet network.

❷ If you press Return to accept the default, the system prompts you for the information that follows.

If the Gateway node, the SNAINI object, and the proxy login information have already been defined on the load host and no changes need to be made, enter N and press Return. The system will skip to Part 2 of the configuration procedure.

❸ If this node was already defined, the previous definition appears as the default. Press Return to accept the default.

If this is a new configuration or you if want to change the default address, enter a unique DECnet node address in the format [*aa.*]*nnnn* and press Return. Your network manager can assign such a unique address.

❹ Enter the Ethernet hardware address of the Ethernet port for the Gateway node (either 12 hexadecimal digits or six pairs of hexadecimal digits separated by hyphens) and press Return.

If this node has already been defined, the previous definition appears as the default. Press Return to accept the default. If this is a new node or if the Ethernet controller in the node has been changed, enter the new Ethernet hardware address and then press Return.

❺ Specify the device and directory on the load host where the dump file is written if the Gateway node performs an up-line dump and press Return. The dump file is not created until it is required. The device you specify must have enough free space for the dump file. If fewer than 8192 blocks are available, a warning message is issued.

The default is SYS$COMMON:[SNA$CSV]. Press Return to accept the default.

❻ Enter the name of the Ethernet circuit (in the format *dev-c*) that connects the load host to the Gateway-CT and press Return. The Gateway node makes service requests for loading and dumping on this circuit.

If the name has already been defined, the previous definition appears as the default. Press Return to accept the default.

```
       The following NCP commands will be used to define the Gateway
       node and SNAINI object in the load host's DECnet database.
       In addition, a proxy login will be established for the Gateway
       initialization process.  ❼
$!+-+-+-+-+-+-+-+-+-+-+-+-+-+-+-+-+-+-+-+-+-+-+-+-+-+-+-+-+-+-+-+-+-+-+-+-+-+-+-
$! Start of file: SYS$COMMON:[SNA$CSV]DEFINE_STAR_ON_MIEMAT.COM
$! DECnet SNA Gateway-CT -- load host database setup
$! Created: dd-mmm-yyyy hh:mm:ss by CONFIGURE V2.1
$! Host node: MIEMAT  User: JONES
$!+-+-+-+-+-+-+-+-+-+-+-+-+-+-+-+-+-+-+-+-+-+-+-+-+-+-+-+-+-+-+-+-+-+-+-+-+-+-+-
$ v = f$verify(1)
$ DEFINE/USER SYS$OUTPUT _NLA0:
$ DEFINE/USER SYS$ERROR _NLA0:
$ RUN SYS$SYSTEM:NCP
PURGE OBJECT SNAINI ALL
PURGE NODE STAR ALL
PURGE NODE 4.752 ALL
CLEAR OBJECT SNAINI ALL
CLEAR NODE STAR ALL
CLEAR NODE 4.752 ALL
$ RUN SYS$SYSTEM:NCP
DEFINE OBJECT SNAINI NUMBER 39 -
       FILE SYS$COMMON:[SNA$CSV]SNAINI.COM PROXY INCOMING
DEFINE NODE 4.752 NAME STAR
DEFINE NODE STAR HARDWARE ADDRESS 08-00-2B-08-CC-B3 -
       LOAD FILE SYS$COMMON:[SNA$CSV]SNACSA021.SYS -
       DUMP FILE SYS$COMMON:[SNA$CSV]STAR.DMP -
       SERVICE CIRCUIT BNA-0 -
       ACCESS BOTH
DEFINE EXECUTOR INCOMING PROXY ENABLED
DEFINE CIRCUIT BNA-0 SERVICE ENABLED
SET OBJECT SNAINI ALL
SET NODE STAR ALL
SET EXECUTOR INCOMING PROXY ENABLED
$ EXIT $STATUS + (0 * 'f$verify(v)')
$!+-+-+-+-+-+-+-+-+-+-+-+-+-+-+-+-+-+-+-+-+-+-+-+-+-+-+-+-+-+-+-+-+-+-+-+-+-+-+-
$! End of file: SYS$COMMON:[SNA$CSV]DEFINE_STAR_ON_MIEMAT.COM
$!+-+-+-+-+-+-+-+-+-+-+-+-+-+-+-+-+-+-+-+-+-+-+-+-+-+-+-+-+-+-+-+-+-+-+-+-+-+-+-

Are you satisfied with these answers? (Y|N) [Y] :  ❽
```

❼ SNACSA$CONFIGURE creates and displays the DEFINE_*gateway-node-name*_ON_*load-host-node*.COM command procedure, which contains NCP commands that define the Gateway node and SNAINI object in the load host's DECnet database. When executed, the commands in the file perform the following functions:

- Remove existing definitions, if any, of the Gateway node and SNAINI in both the permanent and volatile databases.
- Define the SNAINI object.
- Define the Gateway node using the name, addresses, circuit, and files you specified.
- Enable the load host to accept incoming connections via proxy accounts.
- Enable the circuit you specified as a service circuit (for loading the Gateway software).
- Set the above SNAINI, Gateway node, and circuit definitions in the volatile database.

❽ If you are satisfied with the answers you gave to the five prompts at the beginning of Part 1 (Gateway node name, DECnet address, hardware address, Ethernet circuit-id, and dump file location), press Return. The following occurs:

- A proxy account is created on the load host for the Gateway node account. A message appears indicating this.
- The command procedure is run, executing the NCP commands. The command procedure displays as it runs.

Note

The following message could appear:

```
%NONAME-W-NOMSG, Message number 00000000
```

You can ignore this message.

If you answer N and press Return, this part of the configuration is run again, allowing you to provide different values for the items.

```
Creating proxy login for STAR::SNA$GO.
%UAF-I-NAFADDMSG, record successfully added to network proxy database

$ DEFINE/USER SYS$OUTPUT _NLA0:
$ DEFINE/USER SYS$ERROR _NLA0:
$ RUN SYS$SYSTEM:NCP
PURGE OBJECT SNAINI ALL
PURGE NODE STAR ALL
PURGE NODE 4.752 ALL
CLEAR OBJECT SNAINI ALL
CLEAR NODE STAR ALL
CLEAR NODE 4.752 ALL
$ RUN SYS$SYSTEM:NCP
DEFINE OBJECT SNAINI NUMBER 39 -
       FILE SYS$COMMON:[SNA$CSV]SNAINI.COM PROXY INCOMING
DEFINE NODE 4.752 NAME STAR
DEFINE NODE STAR HARDWARE ADDRESS 08-00-2B-08-CC-B3 -
       LOAD FILE SYS$COMMON:[SNA$CSV]SNACSA021.SYS -
       DUMP FILE SYS$COMMON:[SNA$CSV]STAR.DMP -
       SERVICE CIRCUIT BNA-0 -
       ACCESS BOTH
DEFINE EXECUTOR INCOMING PROXY ENABLED
DEFINE CIRCUIT BNA-0 SERVICE ENABLED
SET OBJECT SNAINI ALL
SET NODE STAR ALL
SET EXECUTOR INCOMING PROXY ENABLED

%%% Warning - service must be enabled on circuit BNA-0.

    The configuration procedure has defined the correct service state
    in the permanent database, but it cannot change the running system.
    You must turn the circuit off and then use the NCP command
                SET CIRCUIT BNA-0 SERVICE ENABLED
    before this node can load the gateway system.  ❾

Do you wish to redo this section? (Y|N) [N] :  ❿

        The file you have created has been saved in:

        SYS$COMMON:[SNA$CSV]DEFINE_STAR_ON_MIEMAT.COM

        This command file may be used to redefine the Gateway node
        and SNAINI object in the load host's DECnet database,
        should you need to do so at some future time.
```

❾ You have to manually issue the NCP command to enable service functions on the load host's Ethernet circuit. Before you enable the circuit for service, turn the circuit off with a SET CIRCUIT STATE OFF command. Make a note to execute this command, substituting your load host's circuit-id (BNA-0 in the example) for *dev-c*, after you finish running the configuration procedure.

❿ If you answer Y and press Return, this part of the configuration is run again, allowing you to provide different values for the items.

Press Return to accept the default N.

```
================================================================================
  Part 2: Create a command file to configure the SNA database in the Gateway
================================================================================

Do you wish to create this command file? (Y|N) [Y] :  ⓫

This product supports a single line.

                    +---------------+
                    |   Line CQ-0   |
                    +---------------+


Number of circuits to be configured for CQ-0 (1-4) [1] : 2  ⓬
What type of channel will be used? (Block/Byte/Selector) [Block] : Return  ⓭
Line buffer size (maximum RU size plus 9)? (bytes) [8201] : Return  ⓮)

                    +---------------+
                    |Circuit CHAN-0 |
                    +---------------+

Channel address? (3 hex digits) [] : E11 Return  ⓯

                    +---------------+
                    |   PU SNA-0    |
                    +---------------+

Enter the list of available LU addresses (number or range) [1-255] :Return  ⓰

                    +---------------+
                    |Circuit CHAN-1 |
                    +---------------+

Channel address? (3 hex digits) [] : E12 Return

                    +---------------+
                    |   PU SNA-1    |
                    +---------------+

Enter the list of available LU addresses (number or range) [1-255] : Return
```

⓫ If you press Return to accept the default Y, you are prompted to define line information.

If you answer N and press Return, the configuration process proceeds to Part 3.

⓬ Enter the number of circuits to be configured for the line and press Return. Each circuit corresponds to a channel address on the line; specify the same number of circuits as there are channel addresses defined on the IBM side for this line. Press Return to accept the default 1.

⓭ Enter the type of channel used (byte multiplexer, block multiplexer, or selector) and press Return. Ask your IBM system programmer for the channel type. The default is block multiplexer.

The following prompt appears only if you specified a byte multiplexer channel:

```
Enable forced-burst operation? (Y/N) [N] :
```

You can specify whether the line will operate in forced-burst mode or not. Enter Y and press Return to enable forced-burst mode or press Return to accept the default and disable forced-burst mode.

⓮ Enter the maximum size of buffers used to receive RUs transmitted by the IBM host and press Return. To determine the buffer size, add 9 bytes to the maximum RU size. The default is 8201, which allows RUs up to 8192 bytes. You should set the line buffer size to be large enough to accept the largest RU (plus 9 bytes) that will be sent by the IBM host.

⓯ Enter the channel address of the Gateway-CT as three hexadecimal digits and press Return. Ask your IBM system programmer for the channel address. There is no default channel address.

⓰ The LU list specifies the logical units (LUs) that are defined for the PU. Enter the LUs as a list of decimal number ranges and press Return. DECnet SNA access routines can use only those LUs defined in the list. Any request for communication with an LU not in the list will be rejected. Also, the LUs listed must correspond with the LU addresses defined in the LOCADDR parameter for the IBM ACF/VTAM LU macro. Your IBM system programmer can supply you with these addresses.

```
                +--------------+
                | Access names |
                +--------------+

You will now be prompted for one or more access names.  ⓱
Press <RETURN> when you have no more to enter.

Access name (1-16 chars) [] : NETVIEW [Return]  ⓲
IBM application name (1-8 chars) [] : NETVIEW [Return]  ⓳
IBM logon mode name (1-8 chars) [] : XT3278M2 [Return]  ⓴
IBM user data (1-32 chars) [] : [Return]  ㉑

You will now be prompted for one or more PU/LU pairs.
Press <RETURN> when you have no more to enter.

PU name (SNA-n) [] : SNA-0 [Return]  ㉒
LU list (number or range) [1-255] : 1-255 [Return]  ㉓

PU name (SNA-n) [] : [Return]

Access name (1-16 chars) [] : TSO [Return]
IBM application name (1-8 chars) [] : TSO1 [Return]
IBM logon mode name (1-8 chars) [] : MCAUTO [Return]
IBM user data (1-32 chars) [] : [Return]

You will now be prompted for one or more PU/LU pairs.
Press <RETURN> when you have no more to enter.

PU name (SNA-n) [] : SNA-0 [Return]
LU list (number or range) [1-255] : [Return]

PU name (SNA-n) [] : SNA-1 [Return]
LU list (number or range) [1-255] : 1,7 [Return]

PU name (SNA-n) [] : [Return]

Access name (1-16 chars) [] : [Return]
```

⓱ Access names are a convenient way to pass session-type information when an LU-LU session is being established. *DECnet SNA Gateway-CT and Gateway-ST Management* explains how to use access names. If you know what access names your site will use, you can define them now. You can define them at a later time by editing the configuration command procedure created in Part 2.

When you are finished defining access names (or if you do not wish to define any at this time), press Return at the access name prompt. The configuration procedure then proceeds to Part 3.

⓲ Enter the access name (1-16 alphanumeric characters) and press Return.

⓳ Enter the name of the IBM application for the access name (1-8 alphanumeric characters) and press Return. Sessions established with this access name connect to the designated IBM application. If you need to specify this parameter, ask your IBM system programmer for the name.

⓴ Enter an IBM ACF/VTAM Logon Mode Table entry (1-8 alphanumeric characters) to use at the start of each session and press Return. This entry can specify the protocol rules for the session. If you specify no logon mode name, the default entry for the LU address as defined on the IBM system is used. The name should correspond with the operand label of an IBM ACF/VTAM MODEENT macro.

㉑ Enter the optional string of user data (1-32 characters), which are passed to the session partner and press Return. The format of the data is specific to the IBM application acting as the session partner. Check with your IBM systems programmer for the requirements of this field.

㉒ You are prompted for one or more PU/LU pairs. Press Return when you have no more to enter. The PU name specifies the PU used to access the IBM system. Enter the PU in the format SNA-*n*.

You can define more than one PU per access name. You will be prompted for further PU/LU pairs until you press Return in response to the PU name prompt. You must enter at least one PU per access name.

㉓ The LU list identifies which LUs, for a given PU, can use this access name. Enter a list of numbers and/or number ranges separated by commas and press Return.

```
                    +-----------+
                    |  Servers  |
                    +-----------+

Server SNA-ACCESS
No questions for this server.

Server RJE
No questions for this server.  (24)

Server DHCF

You will now be prompted for the list of LUs allocated to DHCF for each PU.
Press <RETURN> if you do not wish to define any LU for a given PU.  (25)

LU list allocated to DHCF for PU SNA-0 (number or range) [] : 31,32 Return
LU list allocated to DHCF for PU SNA-1 (number or range) [] : 21-23 Return  (26)

     All questions for this section have been answered.

     The following SNANCP commands will be used to set the SNA database
     in the Gateway each time it is loaded.  (27)

$!+-+-+-+-+-+-+-+-+-+-+-+-+-+-+-+-+-+-+-+-+-+-+-+-+-+-+-+-+-+-+-+-+-+-+-+-+-+-+-
$! Start of file: SYS$COMMON:[SNA$CSV]SNAGATEWAY_STAR_SNA.COM
$! DECnet SNA Gateway-CT SNA configuration file
$! Created: dd-mmm-yyyy hh:mm:ss by CONFIGURE V2.1
$! Host node: MIEMAT  User: JONES
$!+-+-+-+-+-+-+-+-+-+-+-+-+-+-+-+-+-+-+-+-+-+-+-+-+-+-+-+-+-+-+-+-+-+-+-+-+-+-+-
$ v = f$verify(1)
$ RUN SYS$SYSTEM:SNANCP
SET LINE CQ-0 -
   PROTOCOL CHANNEL BLOCK -
   BUFFER SIZE 8201 -
   FORCED BURST DISABLED -
   RECEIVE BUFFERS 128 -
   LOGGING INFORMATIONAL
SET CIRCUIT CHAN-0 -
   CHANNEL ADDRESS E11 -
   LINE CQ-0 -
   LOGGING INFORMATIONAL
SET PU SNA-0 CIRCUIT CHAN-0 -
   LU LIST 1-255 -
   SEGMENT SIZE 8201 -
   LOGGING WARNING
SET CIRCUIT CHAN-0 STATE ON
```

24. The system automatically defines all parameters for the SNA-ACCESS and RJE servers. (After the initial configuration, use SNANCP commands to modify any server information.)

25. After you define all your lines and their associated PUs, LUs, and access names, the configuration procedure prompts you for information about the DHCF server.

    If you are not using a DHCF server, press Return at the prompt.

26. The configuration procedure also defines all parameters for the DHCF server except for the LU list information. The configuration procedure will prompt you for this optional DHCF information.

    Enter a list of LUs to be allocated to the DHCF server, for example, 31, 32, 21-23, and then press Return.

    Press Return if you do not wish to define any LU for a given PU.

27. The system then displays the SNANCP commands in the configuration command procedure.

    The file that is displayed contains both information you specified for the SNA components and default system information.

```
SET CIRCUIT CHAN-1 -
   CHANNEL ADDRESS E12 -
   LINE CQ-0 -
   LOGGING INFORMATIONAL
SET PU SNA-1 CIRCUIT CHAN-1 -
   LU LIST 1-255 -
   SEGMENT SIZE 8201 -
   LOGGING WARNING
SET CIRCUIT CHAN-1 STATE ON
SET LINE CQ-0 STATE ON
SET ACCESS NAME NETVIEW -
   APPLICATION NETVIEW -
   LOGON MODE XT3278M2 -
   PU SNA-0 -
   LU LIST 1-255
SET ACCESS NAME TSO -
   APPLICATION TSO1 -
   LOGON MODE MCAUTO -
   PU SNA-0 -
   LU LIST 1-255
SET ACCESS NAME TSO -
   PU SNA-1 -
   LU LIST 1,7
SET SERVER SNA-ACCESS -
   LOGGING WARNING -
   NOTE "Gateway Access Server" -
   STATE ON
SET SERVER RJE -
   LOGGING WARNING -
   NOTE "Remote Job Entry" -
   STATE ON
SET SERVER DHCF -
   PU SNA-0 LU LIST 31,32
SET SERVER DHCF -
   PU SNA-1 LU LIST 21-23 -
   LOGGING WARNING -
   NOTE "Host Command Facility" -
   STATE ON
$ EXIT $STATUS + (0 * 'f$verify(v)')
$!+-+-+-+-+-+-+-+-+-+-+-+-+-+-+-+-+-+-+-+-+-+-+-+-+-+-+-+-+-+-+-+-+-+-+-+-+-+-+-+-+-+-+-+-+-+-+-+-+-+-+-+-+-
$! End of file: SYS$COMMON:[SNA$CSV]SNAGATEWAY_STAR_SNA.COM
$!+-+-+-+-+-+-+-+-+-+-+-+-+-+-+-+-+-+-+-+-+-+-+-+-+-+-+-+-+-+-+-+-+-+-+-+-+-+-+-+-+-+-+-+-+-+-+-+-+-+-+-+-+-

Do you wish to redo this section? (Y|N) [N] : Return (28)

    The file you have created has been saved in:
              SYS$COMMON:[SNA$CSV]SNAGATEWAY_STAR_SNA.COM
        You can edit this command file to change the configuration
        of the SNA database in the Gateway. Any changes you make will
        take effect the next time the Gateway is reloaded.
```

㉘ If you answer Y and press Return, Part 2 of the configuration is run again. You can provide different values at the prompts.

Press Return to accept the default N. The configuration procedure continues as shown.

```
================================================================================
  Part 3: Create a command file to configure the DECnet database in the Gateway
================================================================================

Do you wish to create this command file? (Y|N) [Y] : Return 29

Privileged username? (1-16 chars) [] : SYSTEM Return 30
Privileged password? (1-16 chars) [] : SECRET Return 31
DECnet service password (up to 16 hex digits) [none] : 1E3C41EAB32D3BCD Return 32

        All questions for this section have been answered.

        The following NCP commands will be used to set the DECnet
        database on the Gateway each time the Gateway is loaded.

$!+-+-+-+-+-+-+-+-+-+-+-+-+-+-+-+-+-+-+-+-+-+-+-+-+-+-+-+-+-+-+-+-+-+-+-+-+-
$! Start of file: SYS$COMMON:[SNA$CSV]SNAGATEWAY_STAR_DNA.COM
$! DECnet SNA Gateway-CT DECnet configuration file
$! Created: dd-mmm-yyyy hh:mm:ss by CONFIGURE V2.1
$! Host node: MIEMAT  User: JONES
$!+-+-+-+-+-+-+-+-+-+-+-+-+-+-+-+-+-+-+-+-+-+-+-+-+-+-+-+-+-+-+-+-+-+-+-+-+-
$ v = 'f$verify(0)'
$ DEFINE/NOLOG SNAGM$GATEWAY "STAR""SYSTEM SECRET"":"
$ CONSOLE "SET PASSWORD 1E3C41EAB32D3BCD"
$ RUN SYS$SYSTEM:NCP
SET EXECUTOR NODE STAR
SET EXECUTOR PRIV USER SYSTEM PASSWORD SECRET
$ EXIT $STATUS + (0 * f$verify(v))
$!+-+-+-+-+-+-+-+-+-+-+-+-+-+-+-+-+-+-+-+-+-+-+-+-+-+-+-+-+-+-+-+-+-+-+-+-+-
$! End of file: SYS$COMMON:[SNA$CSV]SNAGATEWAY_STAR_DNA.COM
$!+-+-+-+-+-+-+-+-+-+-+-+-+-+-+-+-+-+-+-+-+-+-+-+-+-+-+-+-+-+-+-+-+-+-+-+-+-

Do you wish to redo this section? (Y|N) [N] : Return 33

        The file you have created has been saved in:

                SYS$COMMON:[SNA$CSV]SNAGATEWAY_STAR_DNA.COM

        You can edit this command file to change the configuration
        of the DECnet database in the Gateway. Any changes you make will
        take effect the next time the Gateway is reloaded.


================================================================================
                            *Configuration Complete*
================================================================================

        You have now completed the three parts of the Gateway configuration
        procedure.  The files you have created will be used to configure
        the Gateway each time it is loaded.

** End of CONFIGURE V2.1
```

29 Press Return to accept the default Y if you want the system to create the command file that configures the DECnet database in the Gateway.

Enter N and press Return if you do not want the system to create this file.

30 Enter the privileged username (1-16 alphanumeric characters) and press Return.

31 Enter the privileged password (1-16 alphanumeric characters) and press Return.

The privileged user name and password control access to the following Gateway functions:

- NCP CLEAR, LOOP, SET, and ZERO commands
- SNANCP CLEAR, LOOP, SET, SHOW LU (for authorization information), and ZERO commands
- SNATRACE commands
- NETTRACE commands

32 Enter the password that triggers the bootstrap mechanism on the target node and press Return.

The password can be up to 16 hexadecimal digits. For Ethernet circuits, the password ranges from 0 to FFFFFFFFFFFFFFFF. If you choose the default, no password is set.

Note

Digital Equipment Corporation recommends that you select a service password that is at least 6 hexadecimal digits long.

33 If you answer Y and press Return, Part 3 of the configuration is run again; you can provide different values at the prompts.

Press Return to accept the default N. The configuration continues as shown.

3.1 DECnet/OSI Configuration Example

```
WECAN>@sys$manager:snacsa$configure Return

 SNACSA$CONFIGURE V2.1
 DECnet SNA Gateway-CT configuration procedure.

 Configuration is divided into three parts:

 . Part 1: Define the Gateway node in the load host's
   DECnet database.

 . Part 2: Create a command file that will be used to
   configure the SNA database in the Gateway
   each time it is loaded.

 . Part 3: Create a command file that will be used to
   configure the DECnet database in the Gateway
   each time it is loaded.

 This configuration procedure prompts you to see if you want
 to run each of the three parts.  All parts must be completed
 before the Gateway can be loaded. Enter "?" at any time for
 help.

DECnet SNA Gateway-CT node name [] : finn Return

================================================================================
  Part 1: Define the Gateway node in the load host DECnet database
================================================================================

Define the Gateway node in WECAN's DECnet database? (Y|N) [Y] : Return

DECnet node address of FINN (aa.nnnn) [] : 4.47 Return
Ethernet hardware address (12 hex digits) [] : 08-00-2b-13-f4-f4 Return
Load file (file-spec) [SYS$COMMON:[SNA$CSV]SNACSA021.SYS] : Return
Device and directory for dump file [SYS$COMMON:[SNA$CSV]] : Return
Host's Ethernet circuit name (circuit-id) [SVA-0] : Return
     Checksum file updated last by SILVERSTONE on 28-JUL-1993 22:00:32.87
%NET$CONFIGURE-I-VERCHECKSUM, verifying checksums

        The following NCL script files have been modified since being
        created by this procedure:

  SYS$SYSROOT:[SYSMGR]NET$ROUTING_STARTUP.NCL;
  SYS$SYSROOT:[SYSMGR]NET$CSMACD_STARTUP.NCL;
  SYS$SYSROOT:[SYSMGR]NET$EVENT_STARTUP.NCL;
  SYS$SYSROOT:[SYSMGR]NET$MOP_CIRCUIT_STARTUP.NCL;

        This procedure may create a new version of these scripts or modify
        information contained within them. In all cases, any previously
        created NCL scripts are renamed to "file.NCL-OLD", so that you
        may review any of your previous changes.
```

```
%NET$CONFIGURE-I-MODCHECKSUM, checksumming NCL
     management scripts modified by NET$CONFIGURE
%NET$CONFIGURE-I-CONFIGCOMPLETED, DECnet/OSI for OpenVMS configuration completed
     Checksum file updated last by SILVERSTONE on  3-AUG-1993 11:55:28.89
%NET$CONFIGURE-I-VERCHECKSUM, verifying checksums

        The following NCL script files have been modified since being
        created by this procedure:

  SYS$SYSROOT:[SYSMGR]NET$ROUTING_STARTUP.NCL;
  SYS$SYSROOT:[SYSMGR]NET$CSMACD_STARTUP.NCL;
  SYS$SYSROOT:[SYSMGR]NET$EVENT_STARTUP.NCL;
  SYS$SYSROOT:[SYSMGR]NET$MOP_CIRCUIT_STARTUP.NCL;

        This procedure may create a new version of these scripts or modify
        information contained within them. In all cases, any previously
        created NCL scripts are renamed to "file.NCL-OLD", so that you
        may review any of your previous changes.

Node 0 MOP Client FINN
at 1993-08-03-11:55:49.392-04:00I0.265


Node 0 MOP Client FINN
at 1993-08-03-11:55:50.232-04:00I0.266

Characteristics

    Circuit                           = SVA-0

Node 0 MOP Client FINN
at 1993-08-03-11:55:50.272-04:00I0.266

Characteristics

    Addresses                         =
       {
          08-00-2B-13-F4-F4 ,
          AA-00-04-00-2F-10 (DEC:.LKG.FINN)
       }

Node 0 MOP Client FINN
at 1993-08-03-11:55:50.372-04:00I0.266

Characteristics

    System Image                      =
       {

          SYS$COMMON:[SNA$CSV]SNACSA021.SYS
       }

Node 0 MOP Client FINN
at 1993-08-03-11:55:50.442-04:00I0.266
```

```
Characteristics
    Dump File                       =
       {
          SYS$COMMON:[SNA$CSV]FINN.DMP
       }

Node 0 MOP Client FINN
at 1993-08-03-11:55:50.522-04:00I0.266
Characteristics
    Dump Address                    = 0

Node 0 MOP Client FINN
at 1993-08-03-11:55:50.652-04:00I0.266
Characteristics
    Verification                    = '0000000000000000'H

Node 0 MOP Client FINN
at 1993-08-03-11:55:50.802-04:00I0.266
Characteristics
    Phase IV Host Name              = WECAN

Node 0 MOP Client FINN
at 1993-08-03-11:55:50.922-04:00I0.266
Characteristics
    Phase IV Host Address           = 4.207

Node 0 MOP Client FINN
at 1993-08-03-11:55:51.062-04:00I0.266
Characteristics
    Phase IV Client Name            = FINN

Node 0 MOP Client FINN
at 1993-08-03-11:55:51.122-04:00I0.266
Characteristics
    Phase IV Client Address         = 4.47
%NET$CONFIGURE-I-MODCHECKSUM, checksumming NCL
     management scripts modified by NET$CONFIGURE
%NET$CONFIGURE-I-CONFIGCOMPLETED, DECnet/OSI for OpenVMS configuration completed
Creating proxy login for FINN::SNA$GO.
%UAF-I-NAFADDMSG, record successfully added to network proxy data base
```

```
Do you wish to redo this section? (Y|N) [N] : n Return

================================================================================
  Part 2: Create a command file to configure the SNA database in the Gateway
================================================================================

Do you wish to create this command file? (Y|N) [Y] : Return

This product supports a single line.

                    +---------------+
                    |   Line CQ-0   |
                    +---------------+

Number of circuits to be configured for CQ-0 (1-4) [1] : 1 Return
What type of channel will be used? (Block/Byte/Selector) [Block] : Return
Line buffer size (maximum RU size plus 9)? (bytes) [8201] : Return

                    +---------------+
                    |Circuit CHAN-0 |
                    +---------------+

Channel address? (3 hex digits) [] : e10 Return

                    +---------------+
                    |   PU SNA-0    |
                    +---------------+

Enter the list of available LU addresses (number or range) [1-255] : Return

                    +--------------+
                    | Access names |
                    +--------------+

You will now be prompted for one or more access names.
Press <RETURN> when you have no more to enter.

Access name (1-16 chars) [] : tso Return
IBM application name (1-8 chars) [] : tsol Return
IBM logon mode name (1-8 chars) [] : mcauto Return
IBM user data (1-32 chars) [] :  Return

You will now be prompted for one or more PU/LU pairs.
Press <RETURN> when you have no more to enter.

PU name (SNA-n) [] : sna-1 Return
LU list (number or range) [1-255] : Return

PU name (SNA-n) [] : Return

Access name (1-16 chars) [] : Return

                    +-----------+
                    |  Servers  |
                    +-----------+

Server SNA-ACCESS
No questions for this server.
```

```
Server RJE
No questions for this server.

Server DHCF
You will now be prompted for the list of LUs allocated to DHCF for each PU.
Press <RETURN> if you do not wish to define any LU for a given PU.

LU list allocated to DHCF for PU SNA-0 (number or range) [] : Return

 All questions for this section have been answered.

 The following SNANCP commands will be used to set the SNA database
 in the Gateway each time it is loaded.

$!+-+-+-+-+-+-+-+-+-+-+-+-+-+-+-+-+-+-+-+-+-+-+-+-+-+-+-+-+-+-+-+-+-+-+-+-+
$! Start of file: SYS$COMMON:[SNA$CSV]SNAGATEWAY_FINN_SNA.COM
$! DECnet SNA Gateway-CT SNA configuration file
$! Created:  3-AUG-1993 11:57:21.81 by SNACSA$CONFIGURE V2.1
$! Host node: WECAN  User: SILVERSTONE
$!+-+-+-+-+-+-+-+-+-+-+-+-+-+-+-+-+-+-+-+-+-+-+-+-+-+-+-+-+-+-+-+-+-+-+-+-+
$ v = f$verify(1)
$ RUN SYS$SYSTEM:SNANCP
SET LINE CQ-0 -
   PROTOCOL CHANNEL BLOCK -
   BUFFER SIZE 8201 -
   FORCED BURST DISABLED -
   RECEIVE BUFFERS 128 -
   LOGGING INFORMATIONAL
SET CIRCUIT CHAN-0 -
   CHANNEL ADDRESS E10 -
   LINE CQ-0 -
   LOGGING INFORMATIONAL
SET PU SNA-0 CIRCUIT CHAN-0 -
   LU LIST 1-255 -
   SEGMENT SIZE 8201 -
   LOGGING WARNING
SET CIRCUIT CHAN-0 STATE ON
SET LINE CQ-0 STATE ON
SET ACCESS NAME TSO -
   APPLICATION TSOL -
   LOGON MODE MCAUTO -
   PU SNA-1 -
   LU LIST 1-255
SET SERVER SNA-ACCESS -
   LOGGING WARNING -
   NOTE "Gateway Access Server" -
   STATE ON
SET SERVER RJE -
   LOGGING WARNING -

RETURN to continue Return
```

```
   NOTE "Remote Job Entry" -
   STATE ON
SET SERVER DHCF -
   LOGGING WARNING -
   NOTE "Host Command Facility" -
   STATE OFF
$ EXIT $STATUS + (0 * 'f$verify(v)')
$!+-+-+-+-+-+-+-+-+-+-+-+-+-+-+-+-+-+-+-+-+-+-+-+-+-+-+-+-+-+-+-+-+-+-+-+-+-+-+-+-+
$! End of file: SYS$COMMON:[SNA$CSV]SNAGATEWAY_FINN_SNA.COM
$!+-+-+-+-+-+-+-+-+-+-+-+-+-+-+-+-+-+-+-+-+-+-+-+-+-+-+-+-+-+-+-+-+-+-+-+-+-+-+-+-+
```

Do you wish to redo this section? (Y|N) [N] : Return

The file you have created has been saved in:

SYS$COMMON:[SNA$CSV]SNAGATEWAY_FINN_SNA.COM

You can edit this command file to change the configuration of the SNA database in the Gateway. Any changes you make will take effect the next time the Gateway is reloaded.

```
================================================================================
  Part 3: Create a command file to configure the DECnet database in the Gateway
================================================================================
```

Do you wish to create this command file? (Y|N) [Y] : Return

Privileged username? (1-16 chars) [] : system Return
Privileged password? (1-16 chars) [] : system Return
DECnet service password (up to 16 hex digits) [none] : Return

All questions for this section have been answered.

The following NCP commands will be used to set the DECnet database on the Gateway each time the Gateway is loaded.

```
$!+-+-+-+-+-+-+-+-+-+-+-+-+-+-+-+-+-+-+-+-+-+-+-+-+-+-+-+-+-+-+-+-+-+-+-+-+-+-+-+-+
$! Start of file: SYS$COMMON:[SNA$CSV]SNAGATEWAY_FINN_DNA.COM
$! DECnet SNA Gateway-CT DECnet configuration file
$! Created:  3-AUG-1993 12:00:49.33 by SNACSA$CONFIGURE V2.1
$! Host node: WECAN  User: SILVERSTONE
$!+-+-+-+-+-+-+-+-+-+-+-+-+-+-+-+-+-+-+-+-+-+-+-+-+-+-+-+-+-+-+-+-+-+-+-+-+-+-+-+-+
$ v = 'f$verify(0)'
$ DEFINE/NOLOG SNAGM$GATEWAY "FINN""SYSTEM SYSTEM""::"
$ CONSOLE "SET PASSWORD 0"
$ RUN SYS$SYSTEM:NCP
SET EXECUTOR NODE FINN
SET EXECUTOR PRIV USER SYSTEM PASSWORD SYSTEM
$ EXIT $STATUS + (0 * f$verify(v))
$!+-+-+-+-+-+-+-+-+-+-+-+-+-+-+-+-+-+-+-+-+-+-+-+-+-+-+-+-+-+-+-+-+-+-+-+-+-+-+-+-+
$! End of file: SYS$COMMON:[SNA$CSV]SNAGATEWAY_FINN_DNA.COM
$!+-+-+-+-+-+-+-+-+-+-+-+-+-+-+-+-+-+-+-+-+-+-+-+-+-+-+-+-+-+-+-+-+-+-+-+-+-+-+-+-+
```

Do you wish to redo this section? (Y|N) [N] : Return

The file you have created has been saved in:

```
  SYS$COMMON:[SNA$CSV]SNAGATEWAY_FINN_DNA.COM

 You can edit this command file to change the configuration
 of the DECnet database in the Gateway. Any changes you make will
 take effect the next time the Gateway is reloaded.

================================================================================
         *Configuration Complete*
================================================================================

 You have now completed the three parts of the Gateway configuration
 procedure.  The files you have created will be used to configure
 the Gateway each time it is loaded.

** End of SNACSA$CONFIGURE V2.1
```

4

Loading the Gateway-CT Software

This chapter explains how to down-line load the Gateway-CT software from the load host into the ChannelServer hardware unit.

Note

This section deals with DECnet/VAX commands and examples, and these may be different for DECnet/OSI. See Section 3.1 and Section 4.3 for complete examples of a configuration and loading of the software on a DECnet/OSI system. Also, refer to the *DECnet/OSI NCL Reference Manual* for information on NCL commands.

After you complete the installation (see Chapter 2) and configuration (see Chapter 3), load the Gateway-CT software into the ChannelServer by doing one of the following:

- For the initial software load, plug in and power up the ChannelServer. As part of its power-up sequence, the hardware unit requests a software load from the load host.
- For subsequent software loads, issue an NCP TRIGGER or remote console BOOT command on the load host. (Ensure that the ChannelServer is powered up.)

Loading should take about 3 minutes, but could vary according to the type of CPU and disks on the load host, the amount of other work the load host is processing, and the volume of traffic on the local area network (LAN).

4.1 Before Loading the Software

Before you load the Gateway-CT software, do the following:

- **Register and Load the PAK.**
  Refer to Chapter 1 for instructions on registering and loading the Product Authorization Key.
- **Install the Gateway-CT V2.1 software.**
  Chapter 2 explains how to install Gateway-CT V2.1.
- **Configure the Gateway-CT system.**
  Chapter 3 explains how to configure the Gateway-CT.
- **Inspect the Ethernet cable to the load host.**
  Check that the cable is connected.
- **Verify that the load host's Ethernet line and the circuit are set properly.**
  Enter the following NCP commands to check the state and characteristics of the load host's Ethernet line and circuit (over which the software will be loaded):

  ```
  NCP>SHOW LINE line-id CHARACTERISTICS
  NCP>SHOW CIRCUIT circuit-id CHARACTERISTICS
  ```

  where *line-id* is the device name of the Ethernet line and *circuit-id* is the device name of the Ethernet circuit. The parameters for the line and circuit you specify will be displayed.

  Table 4–1 shows the default values for several parameters.

Table 4–1 Ethernet Line and Circuit Characteristics

LINE CHARACTERISTICS:	Parameter	Value
	Protocol	Ethernet
	Service Timer	4000 ms
CIRCUIT CHARACTERISTICS:	**Parameter**	**Value**
	Service	Enabled
	Type	Ethernet

If the parameters for your line and circuit do not correspond to the values shown, use the appropriate NCP commands to change these values:

- The line and circuit must both be ON. If they are not, use the NCP SET LINE and SET CIRCUIT commands to set them to the ON state.
- The service timer must be set to a value that is large enough to allow the software to load. The service timer sets the maximum time that will elapse during service for the Gateway-CT before a retransmission is necessary. The default (4000 ms) should be sufficient; if it is not, use the NCP SET LINE SERVICE TIMER command to change this value.
- The service on the circuit must be ENABLED. If it is not, use the NCP SET CIRCUIT SERVICE command to enable service on the circuit.

- **Verify that the ChannelServer installation has been completed.**
  See the *DEC ChannelServer II Installation* or the *DEC ChannelServer Hardware Installation Guide* for details.
- **Enable event logging at the DECnet load host.**
  Event logging records all system and network events or errors and is used to diagnose problems that can occur with the Gateway-CT. Use the NCP SET LOGGING command to enable event logging. The *OpenVMS System Manager's Manual* provides additional information about DECnet event logging.
- **Enable DECnet event logging on the DECnet load host.**
  If you enable event logging at a terminal connected to the load host, you will receive a log of the events that occur during loading. You can examine this log to verify that the Gateway-CT software loaded successfully. If a problem appears while you are loading the software, you can examine the event log to determine the cause.

Note

To enable logging at a terminal connected to the load host, you need OPER privilege.

Issue the following DCL command from the terminal on which you want to receive the event messages:

```
$ REPLY/ENABLE=NETWORK
```

To ensure that SNA event logging is active, use the DCL SHOW SYSTEM command. You should see a process called SNAEVL.

4.2 Loading the Software on DECnet/VAX

You use the NCP TRIGGER command to start loading the Gateway-CT software.

Note

If you use the NCP LOAD command, a communications error between the load host and the Gateway-CT will result. Use the NCP TRIGGER command instead.

If your terminal is logged into the load host, issue the NCP TRIGGER NODE command using the following format:

```
NCP>TRIGGER NODE node-id
```

where *node-id* identifies the name of the Gateway node. If a service password was defined for the Gateway node, include the password in the NCP TRIGGER command.

For example:

```
NCP>TRIGGER NODE STAR SERVICE PASSWORD 1E3C41EAB32D3BCD
```

The NCP TRIGGER command sets off a bootstrap mechanism in the ChannelServer which causes the unit to send a request-to-load message to all hosts on the Ethernet LAN. Gateway load hosts are configured to receive the message. The first load host that responds to the request-to-load message loads the Gateway-CT software into the Gateway node.

If no errors occur during loading, the event-logging terminal displays the following event messages; the exact messages and sequence might vary:

```
%%%%%%%%%%  OPCOM  dd-mmm-yyyy hh:mm:ss.cc %%%%%%%%%%
Message from user DECNET on MIEMAT
DECnet event 0.3, automatic line service
From node 4.576 (MIEMAT), dd-mmm-yyyy hh:mm:ss.cc
Circuit BNA-0, Load, Requested, Node = 4.752 (STAR)
File = SYS$COMMON:[SNA$CSV]SNACSA021.SYS, Operating system
Ethernet address = 08-00-2B-08-CC-B3

%%%%%%%%%%  OPCOM  dd-mmm-yyyy hh:mm:ss.cc  %%%%%%%%%%
Message from user DECNET on MIEMAT
DECnet event 0.3, automatic line service
From node 4.576 (MIEMAT), dd-mmm-yyyy hh:mm:ss.cc
Circuit BNA-0, Load, Successful, Node = 4.752 (STAR)
File = SYS$COMMON:[SNA$CSV]SNACSA021.SYS, Operating system
Ethernet address = 08-00-2B-08-CC-B3

%%%%%%%%%%  OPCOM  dd-mmm-yyyy hh:mm:ss.cc  %%%%%%%%%%
Message from user SYSTEM on MIEMAT
DECnet SNA event 266.10, Logging sink state change
From node 4.752 (STAR), dd-mmm-yyyy hh:mm:ss.cc
Logging sink type = monitor,  Severity = informational
Sink node = 4.576 (MIEMAT)
New state = on, old state = off

%%%%%%%%%%  OPCOM dd-mmm-yyyy hh:mm:ss.cc  %%%%%%%%%%
Message from user SYSTEM on MIEMAT
DECnet SNA event 266.0, Gateway initialization
From node 4.752 (STAR), dd-mmm-yyyy hh:mm:ss.cc
Management,  Severity = informational
Started, DECnet SNA Gateway-CT V2.1 BLn
```

```
%%%%%%%%%%  OPCOM dd-mmm-yyyy hh:mm:ss.cc  %%%%%%%%%%
Message from user SYSTEM on MIEMAT
DECnet SNA event 266.2, Initialization message
From node 4.752 (STAR), dd-mmm-yyyy hh:mm:ss.cc
Management,  Severity = informational
Default node database loaded

%%%%%%%%%%  OPCOM  dd-mmm-yyyy hh:mm:ss.cc  %%%%%%%%%%
Message from user SYSTEM on MIEMAT
DECnet SNA event 266.2, Initialization message
From node 4.752 (STAR), dd-mmm-yyyy hh:mm:ss.cc
Management,  Severity = informational
Setting gateway DECnet configuration

%%%%%%%%%%  OPCOM dd-mmm-yyyy hh:mm:ss.cc  %%%%%%%%%%
Message from user SYSTEM on MIEMAT
DECnet SNA event 266.2, Initialization message
From node 4.752 (STAR), dd-mmm-yyyy hh:mm:ss.cc
Management,  Severity = informational
Setting gateway SNA configuration

%%%%%%%%%%  OPCOM  dd-mmm-yyyy hh:mm:ss.cc %%%%%%%%%%
Message from user SYSTEM on MIEMAT
DECnet SNA event 257.0, Circuit state change
From node 4.752 (STAR), dd-mmm-yyyy hh:mm:ss.cc
Circuit CHAN-0,  Severity = informational
New state = on-starting, old state = off

%%%%%%%%%%  OPCOM  dd-mmm-yyyy hh:mm:ss.cc %%%%%%%%%%
Message from user SYSTEM on MIEMAT
DECnet SNA event 257.0, Circuit state change
From node 4.752 (STAR), dd-mmm-yyyy hh:mm:ss.cc
Circuit CHAN-1,  Severity = informational
New state = on-starting, old state = off

%%%%%%%%%%  OPCOM  dd-mmm-yyyy hh:mm:ss.cc %%%%%%%%%%
Message from user SYSTEM on MIEMAT
DECnet SNA event 256.0, Line state change
From node 4.752 (STAR), dd-mmm-yyyy hh:mm:ss.cc
Line CQ-0,  Severity = informational
New state = on-starting, old state = off

%%%%%%%%%%  OPCOM  dd-mmm-yyyy hh:mm:ss.cc %%%%%%%%%%
Message from user SYSTEM on MIEMAT
DECnet SNA event 256.0, Line state change
From node 4.752 (STAR), dd-mmm-yyyy hh:mm:ss.cc
Line CQ-0,  Severity = informational
New state = on, old state = on-starting
```

After the software has been loaded and initialized without errors, you should see the following display:

```
%%%%%%%%%%  OPCOM  dd-mmm-yyyy hh:mm:ss.cc  %%%%%%%%%%
Message from user SYSTEM on MIEMAT
DECnet SNA event 266.0, Gateway initialization
From node 4.752 (STAR), dd-mmm-yyyy hh:mm:ss.cc
Management,  Severity = informational
Complete, status = success

%%%%%%%%%%  OPCOM  dd-mmm-yyyy hh:mm:ss.cc %%%%%%%%%%
Message from user SYSTEM on MIEMAT
DECnet SNA event 257.0, Circuit state change
From node 4.752 (STAR), dd-mmm-yyyy hh:mm:ss.cc
Circuit CHAN-0,  Severity = informational
New state = on, old state = on-starting

%%%%%%%%%%  OPCOM  dd-mmm-yyyy hh:mm:ss.cc %%%%%%%%%%
Message from user SYSTEM on MIEMAT
DECnet SNA event 257.0, Circuit state change
From node 4.752 (STAR), dd-mmm-yyyy hh:mm:ss.cc
Circuit CHAN-1,  Severity = informational
New state = on, old state = on-starting
```

4.3 Loading the Software on DECnet/OSI

```
WECAN>mc ncl boot mop client finn Return

Node 0 MOP Client FINN
at 1993-08-03-12:01:42.653-04:00I0.304

%%%%%%%%%%  OPCOM   3-AUG-1993 12:39:00.80  %%%%%%%%%%
Message from user SYSTEM on WECAN
Event: Load Request Completed
from: Node DEC:.LKG.WECAN MOP Circuit SVA-0,
at: 1993-08-03-12:38:59.044-04:00I0.266
Client=FINN,
Address=08-00-2B-13-F4-F4,
Program Type=System,
File=SYS$COMMON:<SNA$CSV>SNACSA021.SYS;1
eventUid   67A030F7-8FEE-11CC-8028-AA000400CF10
entityUid  17DC1207-8FE4-11CC-8028-AA000400CF10
streamUid  06FE9EC0-8FE3-11CC-8027-AA000400CF10
```

```
%%%%%%%%%%  OPCOM   3-AUG-1993 12:39:04.46  %%%%%%%%%%
Message from user SYSTEM on WECAN
DECnet SNA event 266.10, Logging sink state change
From node 4.47 (FINN),  3-AUG-1993 12:38:59.78
Logging sink type = monitor,  Severity = informational
Sink node = 4.207 (WECAN)
New state = on, old state = off

%%%%%%%%%%  OPCOM   3-AUG-1993 12:39:07.43  %%%%%%%%%%
Message from user SYSTEM on WECAN
DECnet SNA event 266.0, Gateway initialization
From node 4.47 (FINN),  3-AUG-1993 12:39:01.93
Management,  Severity = informational
Started, DECnet SNA Gateway-CT V2.1-03

%%%%%%%%%%  OPCOM   3-AUG-1993 12:39:15.05  %%%%%%%%%%
Message from user SYSTEM on WECAN
DECnet SNA event 266.1, Initialization failure
From node 4.47 (FINN),  3-AUG-1993 12:39:13.26
Management,  Severity = error
Failed to connect, load host NML
%SYSTEM-F-REJECT, connect to network object rejected

%%%%%%%%%%  OPCOM   3-AUG-1993 12:39:26.45  %%%%%%%%%%
Message from user SYSTEM on WECAN
DECnet SNA event 266.1, Initialization failure
From node 4.47 (FINN),  3-AUG-1993 12:39:24.78
Management,  Severity = error
Failed to connect, load host NML
%SYSTEM-F-REJECT, connect to network object rejected

%%%%%%%%%%  OPCOM   3-AUG-1993 12:39:31.45  %%%%%%%%%%
Message from user SYSTEM on WECAN
DECnet SNA event 266.1, Initialization failure
From node 4.47 (FINN),  3-AUG-1993 12:39:29.82
Management,  Severity = error
Failed to connect, load host NML
%SYSTEM-F-REJECT, connect to network object rejected

%%%%%%%%%%  OPCOM   3-AUG-1993 12:40:45.95  %%%%%%%%%%
Message from user SYSTEM on WECAN
DECnet SNA event 266.2, Initialization message
From node 4.47 (FINN),  3-AUG-1993 12:40:44.36
Management,  Severity = informational
Setting gateway DECnet configuration

%%%%%%%%%%  OPCOM   3-AUG-1993 12:40:52.96  %%%%%%%%%%
Message from user SYSTEM on WECAN
DECnet SNA event 257.0, Circuit state change
From node 4.47 (FINN),  3-AUG-1993 12:40:51.35
Circuit CHAN-0,  Severity = informational
New state = on-starting, old state = off
```

```
%%%%%%%%%%  OPCOM   3-AUG-1993 12:40:54.75  %%%%%%%%%%
Message from user SYSTEM on WECAN
DECnet SNA event 256.0, Line state change
From node 4.47 (FINN),  3-AUG-1993 12:40:51.40
Line CQ-0,  Severity = informational
New state = on-starting, old state = off

%%%%%%%%%%  OPCOM   3-AUG-1993 12:40:58.12  %%%%%%%%%%
Message from user SYSTEM on WECAN
DECnet SNA event 256.0, Line state change
From node 4.47 (FINN),  3-AUG-1993 12:40:51.40
Line CQ-0,  Severity = informational
New state = on, old state = on-starting

%%%%%%%%%%  OPCOM   3-AUG-1993 12:40:58.34  %%%%%%%%%%
Message from user SYSTEM on WECAN
DECnet SNA event 256.1, Channel reset
From node 4.47 (FINN),  3-AUG-1993 12:40:56.33
Line CQ-0,  Severity = errorType = selective

%%%%%%%%%%  OPCOM   3-AUG-1993 12:40:58.73  %%%%%%%%%%
Message from user SYSTEM on WECAN
DECnet SNA event 257.0, Circuit state change
From node 4.47 (FINN),  3-AUG-1993 12:40:56.33
Circuit CHAN-0,  Severity = informational
New state = on-disconnected, old state = on-starting

%%%%%%%%%%  OPCOM   3-AUG-1993 12:41:06.53  %%%%%%%%%%
Message from user SYSTEM on WECAN
DECnet SNA event 266.0, Gateway initialization
From node 4.47 (FINN),  3-AUG-1993 12:41:04.93
Management,  Severity = informational
Complete, status = success
```

If errors occur during loading, the event-logging terminal displays any errors which were detected during loading and initialization. *DECnet SNA Gateway for Channel Transport and Gateway for Synchronous Transport Management* lists the SNANCP error messages and explains how to recover from them.

If any errors occur when the configuration file loads, the errors are reported to the event log. *DECnet SNA Gateway for Channel Transport and Gateway for Synchronous Transport Management* lists and explains all initialization messages generated by the Gateway-CT software.

If you issue an NCP TRIGGER command from any node on the Ethernet LAN and the Gateway node fails to start, you might try starting the load at the hardware unit. *DECnet SNA Gateway for Channel Transpfort Problem Solving (OpenVMS and ULTRIX)* should help you find the source of a failure.

4.4 Checking the Connection Between the Gateway Node and the Load Host

After the Gateway-CT software loads, check the connection between the Gateway node and the load host. After the Gateway node starts up, verify that the link from the load host to the DECnet node is working properly, as follows:

- Ensure that the load host can communicate with the Gateway node; issue the NCP command SET EXECUTOR NODE with the Gateway node as the node name. If you receive an error message after entering this command, refer to *DECnet SNA Gateway for Channel Transport Problem Solving (OpenVMS and ULTRIX)* for help.
- Check the results of the NCP SET EXECUTOR NODE command; issue the following command:

  ```
  NCP>SHOW EXECUTOR STATUS
  ```

  If you receive an error message after this command, see *DECnet SNA Gateway-CT Problem Solving (OpenVMS and ULTRIX)*. Also, check the event log for a message showing circuit activity with the DECnet node since the Gateway-CT was booted.

Index

A

Access names, 1–13
  IBM application name, 1–13
  IBM logon mode name, 1–13
  IBM user data, 1–14
  LU list defined for the PU, 1–13
  PU name defined for the access name, 1–13
Access routines
  required for installation, 1–6
ASTLM quota, 1–4

B

Bill of Materials (BOM), 1–2
BIOLM quota, 1–4
BYTLM quota, 1–4

C

Channel-attached circuits
  defining the channel address, 1–12, 3–9
  defining the circuit name, 1–12
Channel-attached line
  channel, type of, 1–11
Channel-attached lines
  channel, type of, 3–9
  forced-burst mode, 1–12, 3–9
  line buffer size, 1–12, 3–9
  number of circuits, 1–11, 3–9
  type of channel, 1–12
Configuring the Gateway-CT
  DECnet database information, 3–1
  Gateway node, 3–1
  SNA components, 3–1

D

DECnet SNA Gateway-CT
  defined, 1–1
  preparing for installation, 1–2
DECnet/SNA network
  DECnet nodes in a, 1–3
Defining access names
  access name, 3–11
  IBM application name, 3–11
  IBM user data, 3–11
  logon mode name, 3–11
  PU name defined for the access name, 3–11
  PU/LU pairs, 3–11
Defining DECnet database information
  file specification, 3–1
  privileged password, 1–15, 3–17
  privileged username, 1–15, 3–17
Defining information in the DECnet database, 1–14, 3–17
Defining SNA components
  access names, 1–13
  channel-attached circuits, 1–12, 3–9
  channel-attached line, 1–11
  channel-attached lines, 3–9
  file specification, 3–1
  physical units (PUs), 1–12, 3–9

Defining the Gateway node
DECnet node address, 1–8, 3–3
Dump file device and directory, 1–10, 3–3
Ethernet hardware address, 1–9, 3–3
file specification, 3–1
Host's Ethernet service circuit, 1–10, 3–3
Defining the Gateway-CT node name, 3–3
DIOLM quota, 1–4
Disk space
requirements for installation, 1–4
Distribution kit, 1–2

G

Gateway DECnet database, 1–14, 3–17

I

Initializing the Gateway DECnet database, 1–14, 3–17
Installation
diagnostics, 2–5
files created, 2–10
Gateway management, 2–5
preparing the DECnet environment, 1–3
preparing the IBM environment, 1–3
procedure, 2–1
Installation Verification Procedure (IVP), running during installation, 2–7

L

Loading the Gateway -CT software
terminal logged into load host, 4–5
Loading the Gateway-CT software
NCP command lines, 4–5
preloading tasks, 4–2
with NCP TRIGGER NODE, 4–1, 4–4

O

OpenVMS
installing a new version of, 1–5
system privileges, 1–4

P

Preparing the DECnet environment for the installation, 1–3
Preparing the IBM environment for the installation, 1–3
Privileges
see OpenVMS system privileges
Process quotas, 1–4
PUs
LUs defined for the PU, 1–12

U

UIC, specifying during installation, 2–7

V

VMScluster, 1–6
VMSINSTAL utility
running, 2–1
specifying OPTIONS N, 2–3