DECnet SNA Gateway for Synchronous Transport

Installation (OpenVMS)

Part Number: AA-JE89E-TE

November 1993

This document describes how to install the software for the DECnet SNA Gateway for Synchronous Transport Version 1.2, and how to read the on-line release notes before or after installation.

Revision/Update Information:	This is a revised manual.
Operating System and Version:	OpenVMS VAX V5.4 or later OpenVMS AXP V1.5
Software Version:	DECnet SNA Gateway for Synchronous Transport, V1.2

November 1993

Information in this document is subject to change without notice and should not be construed as a commitment by Digital Equipment Corporation. Digital Equipment Corporation assumes no responsibility for any errors that may appear in this document.

The software described in this document is furnished under a license and may be used or copied only in accordance with the terms of such a license.

No responsibility is assumed for the use or reliability of software on equipment that is not supplied by Digital Equipment Corporation or its affiliated companies.

Restricted Rights: Use, duplication, or disclosure by the U.S. Government is subject to restrictions as set forth in subparagraph (c)(1)(ii) of the Rights in Technical Data and Computer Software clause at DFARS 252.227-7013.

Copyright ©1988, 1991, 1993 Digital Equipment Corporation
All Rights Reserved

The following are trademarks of Digital Equipment Corporation:

AXP, DEC, DEC/CMS, DEC/MSS, DECnet, DECsystem-10, DECSYSTEM-20, DECUS, DECwriter, DIBOL, EduSystem, IAS, MASSBUS, OpenVMS, PDP, PDT, RSTS, RSX, UNIBUS, VAX, VAXcluster, VMS, VT, and the Digital logo.

IBM is a registered trademark of International Business Machines Corporation.

Contents

Preface vii

1 Before Installing the Gateway-ST

1.1 Preparing the IBM SNA Environment 1–4
1.2 Preparing the DECnet Environment 1–4
1.2.1 Gateway Node 1–5
1.2.2 Gateway Load Host Node 1–6
1.2.3 Access Nodes 1–8
1.3 Preparing Communications Equipment 1–8
1.3.1 Connecting the Gateway-ST to Ethernet 1–8
1.3.2 Connecting the Gateway-ST to the SNA Network 1–8
1.3.3 Modems 1–10
1.3.4 Adapter Cables 1–10

2 Installing the Gateway-ST Software

2.1 Preparing to Install the Gateway-ST Software 2–1
2.1.1 OpenVMS System Tailoring 2–1
2.1.2 Prerequisite Software and Licensing 2–2
2.1.3 On-Line Release Notes 2–2
2.1.4 Installation Procedure Requirements 2–3
2.2 Running the Installation Verification Procedure (IVP) 2–4
2.3 Installing Files on an OpenVMS System 2–5
2.3.1 Using VMSINSTAL 2–6
2.4 Installing the Software 2–7
2.5 Files Created or Modified During Installation 2–13
2.6 Error Conditions 2–15
2.7 Determining and Reporting Problems 2–16
2.8 Maintenance Updates 2–16
2.9 Sample Installation 2–17

3 Configuring the Gateway-ST

3.1 Preparing to Configure the Gateway-ST 3–2
3.2 Configuring the Software 3–4
3.2.1 Introductory Remarks 3–4
3.2.2 Gateway Node Name 3–5
3.2.3 Part 1: Information for the Gateway Node Definition 3–5
3.2.3.1 DECnet Address of the Gateway Node 3–5
3.2.3.2 Dump File Device and Directory 3–6
3.2.3.3 Ethernet Hardware Address 3–6
3.2.3.4 Ethernet Circuit 3–6
3.2.3.5 End of Part 1 3–6
3.2.4 Part 2: Information About Gateway Components 3–7
3.2.4.1 Lines 3–8
3.2.4.2 Circuits 3–10
3.2.4.3 Physical Units 3–11
3.2.4.4 Access Names 3–12
3.2.4.5 Servers 3–13
3.2.4.6 End of Part 2 3–14
3.2.5 Part 3: Information About the Gateway DECnet Database 3–15
3.2.5.1 Privileged Username and Password 3–16
3.2.5.2 End of Part 3 3–16
3.3 Sample DECnet/VAX Configuration 3–17
3.4 Sample DECnet/OSI Configuration 3–24

4 Loading the Gateway-ST Software

4.1 Before Loading the Gateway-ST 4–2
4.1.1 Checking the Load Host Connection 4–2
4.1.2 Enabling Event Logging on the Load Host 4–2
4.2 Loading the Software from the Hardware Unit 4–3
4.3 Loading the Software from a Terminal 4–3
4.3.1 Loading from a Terminal Logged into the load host 4–5
4.3.2 Loading from a Terminal Not Logged into the Load Host . . . 4–6
4.4 Checking the Gateway Node to Load Host Connection 4–7
4.5 Sample DECnet/OSI Configuration 4–8

Index

Examples

3–1	Information for Configuring the Gateway-ST	3–3

Figures

1	Gateway-ST Manuals	ix
1–1	DECnet SNA Network with a DEC MicroServer Gateway-ST	1–2
1–2	DECnet SNA Network with a DEC MicroServer-SP	1–3

Tables

1–1	DEC MicroServer-SP Session Support	1–5
1–2	DEC MicroServer Session Support	1–6
1–3	Ethernet Line and Circuit Characteristics	1–7
1–4	DEC MicroServer-SP Port Speeds	1–9
1–5	DEC MicroServer Port Speeds	1–9
1–6	Modem Adapter Cables	1–10
2–1	Installation Requirements for Gateway-ST	2–3
2–2	Files Created During Installation	2–13

Preface

The DECnet SNA Gateway for Synchronous Transport (called the DECnet SNA Gateway-ST or Gateway-ST in this manual) is a hardware and software system that provides an interface between IBM and Digital Equipment Corporation networks that use SDLC lines and circuits. By handling the different communications protocols between an IBM network and a Digital network, the Gateway-ST enables certain nodes in a Digital DECnet network to communicate with one or more hosts in an IBM SNA network.

The Gateway-ST software runs on either the four-port DEC MicroServer (DEMSA) or single-port DEC MicroServer-SP (DEMSB).

Note

Throughout this manual, the hardware server box is referred to generically. Where differences occur, distinctions between the DEC MicroServer (the four-port server product) and the DEC MicroServer-SP (the single-port server product) are noted.

This manual tells you how to install the Gateway-ST and Gateway-ST Management software on an OpenVMS host, how to configure the system, and how to load the software into the DEC MicroServer or DEC MicroServer-SP. Use this manual in conjunction with other Digital and IBM documentation.

Intended Audience

This manual is written for Digital system or network managers responsible for planning and installing a Gateway-ST system.

New Features

This release of DECnet SNA Gateway for Synchronous Transport enables the loading of software from DECnet/OSI for OpenVMS V5.6, and is also available for OpenVMS VAX as of V1.2 ECO3.

Document Structure

This document contains the following sections:

- Chapter 1, Before Installing the Gateway-ST, explains how you should plan and prepare for product installation.
- Chapter 2, Installing the Gateway-ST and Gateway-ST Management Software, explains how you should install the software on the DECnet node(s) that you plan to use as a load host.
- Chapter 3, Configuring the Gateway-ST, explains how to configure the Gateway-ST once you have installed the software. This chapter also lists the IBM information required during configuration.
- Chapter 4, Loading the Gateway-ST Software, explains how to load the Gateway-ST system image from the load host to the Gateway-ST hardware.

The postage-prepaid Reader's Comments form on the last page of this document requests the user's critical evaluation to assist us in preparing future documentation.

Figure 1 lists the Gateway-ST manuals according to the tasks they describe. Arrows indicate the suggested order in which to use the manuals. Highlighting indicates this manual.

Figure 1 Gateway-ST Manuals

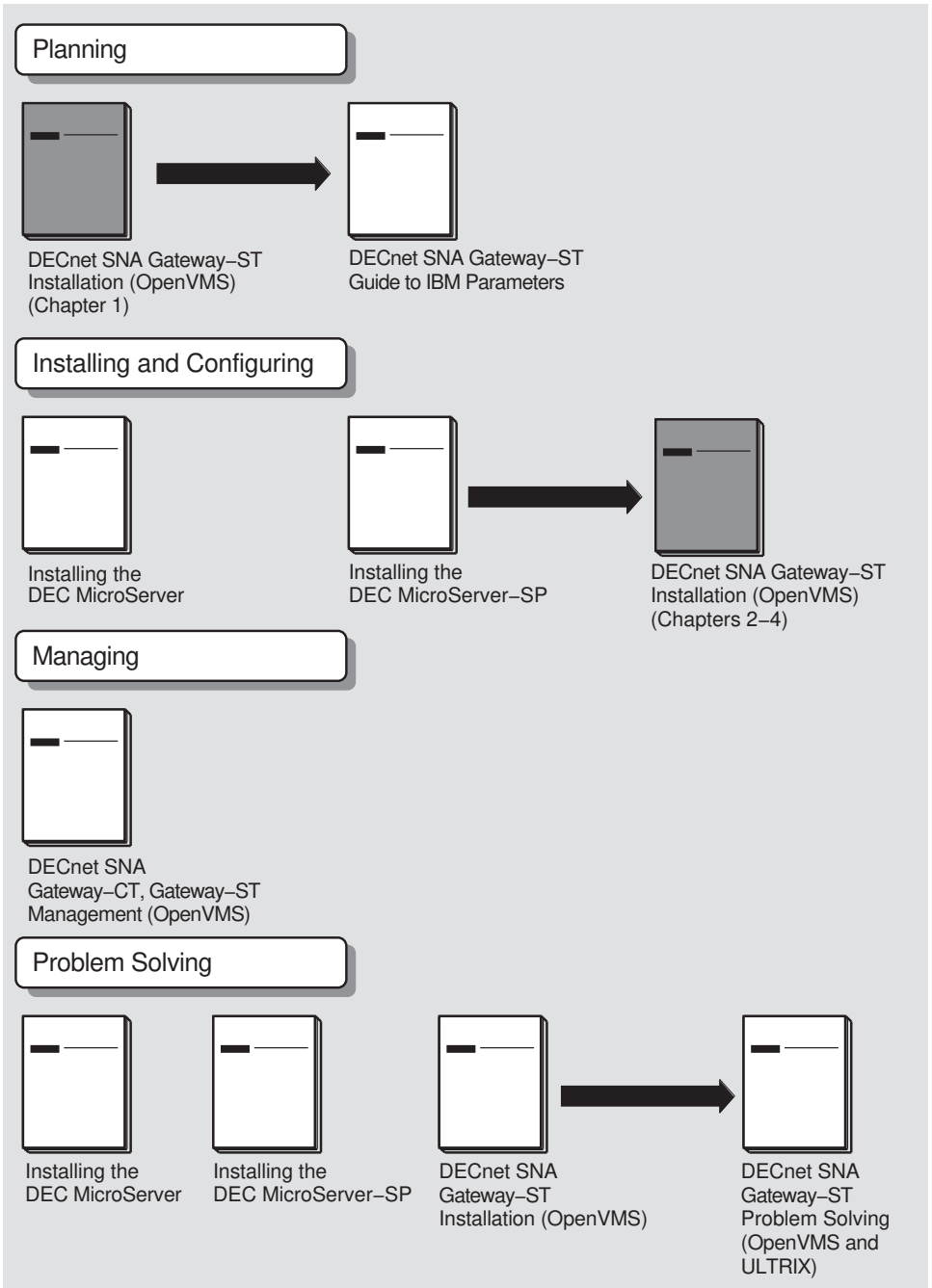

LKG–4991–93R

In addition to the Gateway-ST base communication system, Digital Equipment Corporation provides the following access routine products that run on OpenVMS and use the Gateway-ST to access IBM systems:

- **Bulk Data Transfer**
  - DECnet SNA Data Transfer Facility for OpenVMS
  - DECnet SNA Remote Job Entry for OpenVMS
  - DECnet SNA Printer Emulator for OpenVMS
- **Programming Interface**
  - DECnet SNA APPC/LU6.2 Programming Interface for OpenVMS
  - DECnet SNA 3270 Data Stream Programming Interface for OpenVMS
  - DECnet SNA Application Programming Interface for OpenVMS
- **Interactive Access**
  - DECnet SNA 3270 Terminal Emulator for OpenVMS
  - DECnet SNA MS–DOS 3270 Terminal Emulator
  - DECnet SNA ULTRIX 3270 Terminal Emulator
  - DECnet SNA VMS Distributed Host Command Facility
- **Office Information Transfer**
  - DECnet/SNA DISOSS Document Exchange Facility
  - External Document Exchange with IBM DISOSS
  - VAX Message Router/P Gateway
  - VAX Message Router/S Gateway

The following OpenVMS manuals are also useful:

- *OpenVMS Networking Manual*
- *OpenVMS Network Control Program Manual*
- *OpenVMS Install Utility Manual*
- *OpenVMS System Messages and Recovery Procedures*

- *Guide to Maintaining an OpenVMS System*
- *Guide to OpenVMS System Security*
- *OpenVMS Authorize Utility Manual*
- *OpenVMS Network Control Language Manual*

The following IBM documents are also useful:

- *SNA System Problem Determination Guide* (IBM Order No. G320-6016)
- *Advanced Communication Functions for VTAM, Operations* (IBM Order No. ST27-0612)
- *Advanced Communication Functions for VTAM, Diagnosis* (IBM Order No. ST27-0615)
- *ACF/VTAM Diagnosis Reference* (IBM Order No. SC27-0621)
- *ACF/SNA System Problem Determination Guide, Vol 1* (IBM Order No. GG24-1514)
- *ACF/SNA System Problem Determination Guide, Vol 2* (IBM Order No. GG24-1523)
- *Systems Network Architecture Formats* (IBM Order No. GA27-3136)
- *CICS/OS/VS Version 1 Release 7 Problem Determination Guide* (IBM Order No. SC33-0242)
- *CICS/OS/VS Version 1 Release 7 Data Areas* (IBM Order No. LY33-6035)
- *CICS/VS Version 1 Release 7 Diagnosis Reference* (IBM Order No. LC33-0243)
- *Network Problem Determination Application User Reference* (IBM Order No. SC34-2114)

Conventions

The following conventions are used throughout this manual:

Convention	Meaning
`SNANCP> SET LINE` *`line-id`*	Command examples show system output and user input in black monospaced type.
	In both command and syntax examples, uppercase letters represent text that you must enter exactly as shown. Lowercase letters in italics represent variables for which you must substitute specific information.
UPPERCASE	Commands, command options, parameters, system calls, subroutines, user names, files names, and directory names appear in uppercase.
[*opt-arg*]	Square brackets enclose optional parts of a command. Do not include the brackets when entering the optional argument.
Ret	A symbol with a one- to three-character abbreviation indicates that you press a key on the terminal (in this example, the Return key). Unless otherwise stated, end every command line by pressing Ret.
Ctrl/*x*	This symbol indicates that you press and hold down the key labeled Ctrl while simultaneously pressing another key (for example, Ctrl/C or Ctrl/T).

When you issue NCP, NCL, and SNANCP commands, many component names, parameters, and qualifiers require additional information. In most cases, the syntax of this additional information follows a standard set of rules. (Exceptions to these rules are noted where appropriate.) All numeric values are in decimal from and range from 0 to 65,535 unless otherwise specified.

The following conventions are used for SNANCP and NCP commands:

Convention	Meaning
circuit-id	A string of characters whose exact syntax is that for a DECnet or SNA circuit identification. On DECnet nodes, circuit identification takes one of the following formats: *dev-c* *dev* A device name. *c* A decimal number (0 or a positive integer) designating the device's hardware controller. On the Gateway-ST node, the Ethernet circuit is identified by the string ETHERNET. SDLC circuits are identified by a string in the form SDLC-*n*, where *n* indicates the controller number of the line allocated to the circuit.
E-address	A string of 12 hexadecimal digits, represented by 6 bytes separated by hyphens (for example, AA-00-04-00-AB-04). The string indicates the Ethernet hardware address.

Convention	Meaning
line-id	A string of characters whose exact syntax is that for a DECnet or SNA line identification. On DECnet nodes, line identification takes one of the following formats: *dev-c* *dev* A device name. *c* A decimal number (0 or a positive integer) designating the device's hardware controller. For all nonmultiplexed lines, the unit number is optional and, if specified, is always zero (0). On the Gateway-ST node, the Ethernet line is identified by the string ETHERNET. The lines from the Gateway-ST to the IBM system are identified as a string in the form SYN-*n*, where *n* indicates the number of the line.
node-address	A numeric value in the range of 1.1 to 63.1023, composed of an area number to the left of the period followed by a node number to the right of the period. If the area number is not supplied, the area number of the executor node is used. The default area number for the executor is 1.
node-id	Either a *node-name* or a *node-address*.
node-name	A string of up to 6 alphanumeric characters containing at least 1 alphabetic character.

Abbreviations and Acronyms

This manual uses the following abbreviations and acronyms:

ACF/NCP	Advanced Communications Function with Network Control Program (also referred to as IBM NCP)
API	DECnet SNA Application Programming Interface for OpenVMS
APPC/LU6.2	DECnet SNA APPC/LU6.2 Programming Interface for OpenVMS
CICS/VS	Customer Information Control System/Virtual Storage (also referred to as CICS)
DECnet NCP	Digital's Network Control Program (also referred to as NCP)
DDXF	DECnet/SNA VMS DISOSS Document Exchange Facility
DHCF	DECnet/SNA VMS Distributed Host Command Facility
DSPRINT	MVS/TSO/VTAM Data Set Print Facility
DTF	DECnet SNA Data Transfer Facility
EDE	External Document Exchange with DISOSS
GAS	Gateway Access Server
IBM NCP	IBM's Network Control Program
IMS/VS	Information Management System/Virtual Storage (also referred to as IMS)
JES2	Job Entry Subsystem 2
JES3	Job Entry Subsystem 3
LU	Logical unit
LU1	Logical unit type 1
LU2	Logical unit type 2
LU3	Logical unit type 3
LU6.2	Logical unit type 6.2
MVS	IBM's Multiple Virtual Storage operating system
MR/S	VAX Message Router/S Gateway
MR/P	VAX Message Router/P Gateway
NCL	Network Control Language
NCP	Network Control Program. This manual uses NCP to refer to the Digital product and IBM NCP to refer to the IBM product.
PLU	Primary logical unit
PrE	DECnet SNA Printer Emulator for OpenVMS
PU	Physical unit

PU2	Physical unit type 2
RH	Request/response header
RJE	DECnet SNA Remote Job Entry for OpenVMS
RU	Request/response unit
SDLC	Synchronous Data Link Control
SLU	Secondary logical unit
SNA	IBM's Systems Network Architecture
SNANCP	DECnet SNA Gateway Network Control Program
SNAP	DECnet SNA Gateway Management display utility
SNATRACE	DECnet SNA Gateway Management protocol trace utility
SSCP	System services control point
3270 DS	DECnet SNA 3270 Data Stream Programming Interface for OpenVMS
3270 TE	DECnet SNA 3270 Terminal Emulator for OpenVMS
TH	Transmission header
TSO	IBM's Time Sharing Option
VM	IBM's Virtual Machine operating system
VSE/SP	Virtual Storage Extended/System Package
VTAM	Virtual Telecommunications Access Method

1

Before Installing the Gateway-ST

The DECnet SNA Gateway-ST is a system of hardware and software that handles the protocol differences between IBM SNA networks and Digital DECnet networks. Access routines such as the DECnet SNA 3270 Terminal Emulator (TE) for OpenVMS use the Gateway-ST to access IBM applications and programs. Version 1.2 of this software combines management and Gateway-ST software in a single package. This chapter discusses the planning and preparation needed for a Gateway-ST installation.

Gateway-ST system installation has four parts:

1. Installing the Gateway-ST hardware (see *Installing the DEC MicroServer* or *Installing the DEC MicroServer-SP*).
2. Installing the Gateway-ST software, including management (see Chapter 2).
3. Configuring the Gateway-ST system (see Chapter 3).
4. Loading the Gateway-ST software (see Chapter 4).

Figure 1–1 shows a sample DECnet SNA network with the Gateway-ST software running on a DEC MicroServer.

Figure 1–1 DECnet SNA Network with a DEC MicroServer Gateway-ST

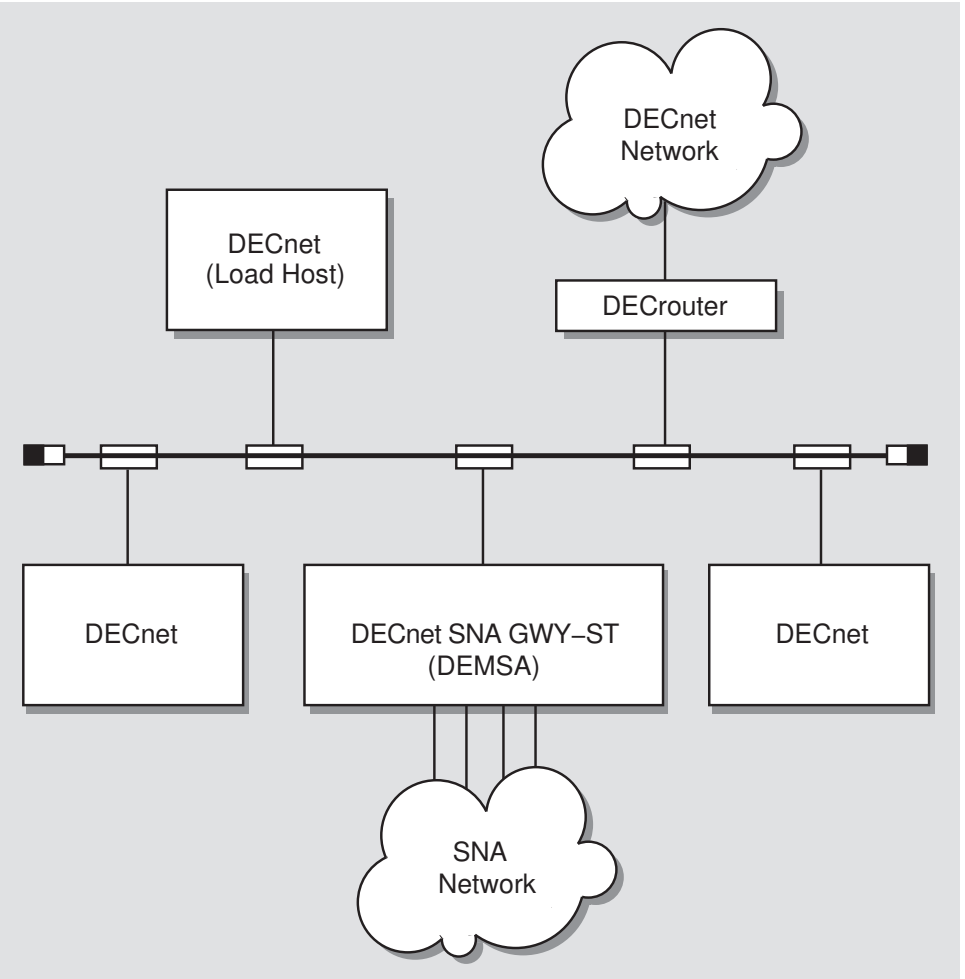

LKG–2942–89R

Figure 1–2 shows a sample DECnet SNA network with the Gateway-ST software running on a DEC MicroServer-SP.

Figure 1–2 DECnet SNA Network with a DEC MicroServer-SP

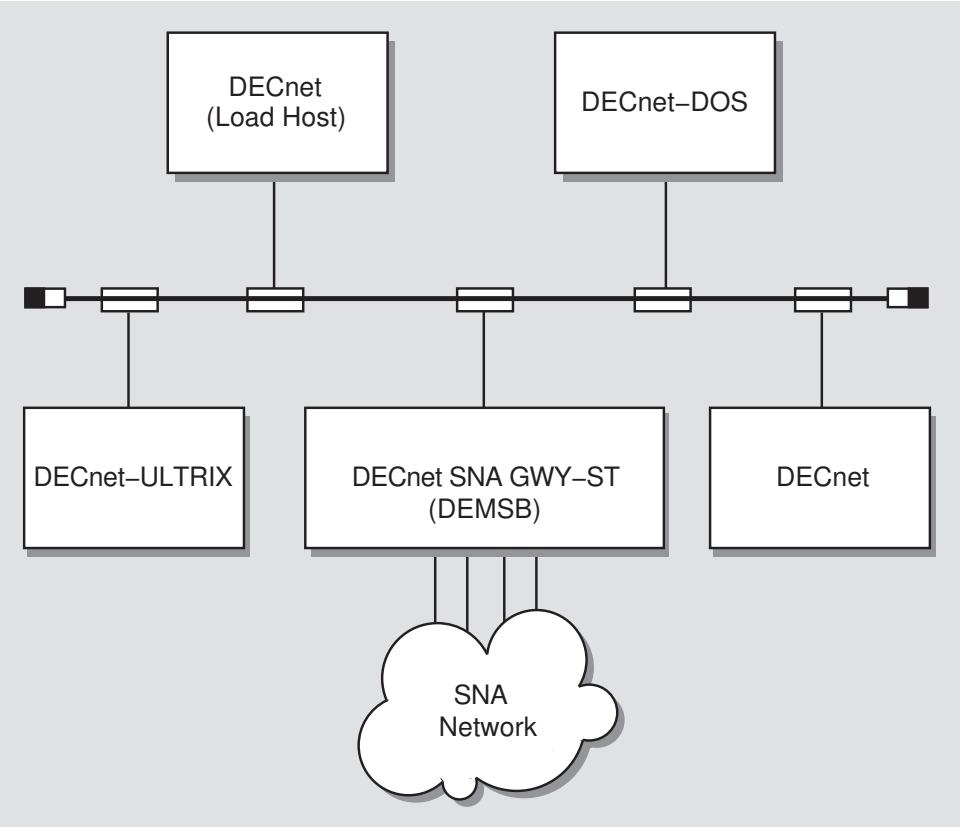

LKG–2943–89R

Before installing a Gateway-ST system, you must make preparations to ensure that all parts of the Gateway-ST system work cooperatively and efficiently. As part of your preparation, determine the major application of the Gateway-ST. The application affects how you configure your Gateway-ST system.

After determining your application, you must identify what hardware and software you need in each of the following areas:

- IBM SNA network
- DECnet network
- DECnet SNA Gateway-ST
- Communications equipment

1.1 Preparing the IBM SNA Environment

To allow the DECnet SNA access routines to communicate with an IBM SNA network through the Gateway-ST, you have to prepare certain software components in the IBM environment. The *DECnet SNA Gateway-ST Guide to IBM Parameters* identifies the IBM parameters required for successful communication between the IBM host and the Gateway-ST. To ensure that the IBM parameters are correctly defined, the IBM system administrator must be familiar with the *DECnet SNA Gateway-ST Guide to IBM Parameters*. This book contains a checklist of the information and parameters the system programmer must use to set up the IBM system. For details of how IBM parameter settings affect parameter settings for various Gateway components, see Chapter 3 of this manual.

Note

Since IBM system programmers reconfigure and generate their systems according to a set schedule, give them as much advance notice as possible to prepare for the Gateway-ST installation.

1.2 Preparing the DECnet Environment

Before installing the Gateway-ST software, you must identify the DECnet nodes where you will install Gateway Management and Gateway-ST software. Make sure these nodes are properly configured.

A DECnet SNA network has the following DECnet nodes:

- **Gateway node:** The DEC MicroServer or DEC MicroServer-SP that serves as the Gateway-ST hardware base. (Although the Gateway itself is a DECnet node, this manual refers to it as the Gateway node rather than a DECnet node.)
- **Gateway load host node:** The DECnet node on which you install the Gateway-ST software. This is the node from which you load the Gateway-ST system image into the DEC MicroServer hardware. Because the Gateway load host node must contain the Gateway management software, you must install the complete Gateway-ST software package on this node.
- **Access node:** A DECnet node with one or more access routine products (for example, DECnet SNA Data Transfer Facility) installed. A DECnet SNA network can have one or more access nodes. A Gateway load host node can also be an access node.

  For information on installing DECnet SNA access routine software, see the documentation for the respective product.

1.2.1 Gateway Node

The Gateway-ST can run on either a single-port or four-port version of the DEC MicroServer. When running on the single port DEC MicroServer-SP, Gateway-ST V1.2 software can support a single synchronous line operating up to 19.2K bps. This hardware base supports up to 32 concurrent sessions running on GAS, and 16 concurrent sessions running on RJE or DHCF servers. Table 1–1 outlines the maximum session support when using the DEC MicroServer-SP.

Table 1–1 DEC MicroServer-SP Session Support

Server	Maximum number of LU to LU sessions
GAS	32
RJE	16
DHCF	16
Total combined sessions for all servers	32

The four-port DEC MicroServer offers 128 concurrent sessions across four synchronous circuits at speeds up to 256K bps. This hardware base supports any DECnet SNA access routine that uses GAS, RJE, or DHCF servers. Table 1–2 outlines the maximum session support when using the DEC MicroServer.

Table 1–2 DEC MicroServer Session Support

Server	Maximum number of LU to LU sessions
GAS	128
RJE	32
DHCF	16
Total combined sessions for all servers	128

Refer to the installation guide packaged with the DEC MicroServer or the DEC MicroServer-SP for details on specific hardware requirements.

1.2.2 Gateway Load Host Node

You must install the complete Gateway-ST software package on a Gateway load host node. In environments where reliability is critical, you should install the Gateway software on at least one additional load host. All load hosts must have the complete Gateway-ST software package installed.

The second load host can load the software to the Gateway node if the first load host is unavailable. The second load host can also receive dumps from the Gateway node. You can use any DECnet node as a load host for the Gateway-ST provided the node is running OpenVMS VAX V5.4 (or later), or OpenVMS AXP V1.5, and the node is connected to the same Ethernet as the Gateway node.

Note

Refer to the *DECnet/OSI Network Management* book for DECnet/OSI information.

Before you begin the installation (on DECnet/VAX), do the following:

1. Check that the load host is physically connected to the Ethernet cable.
2. Verify the status of the load host's Ethernet line and circuit with the following NCP commands:

```
NCP>SHOW LINE line-id STATUS
NCP>SHOW CIRCUIT circuit-id STATUS
```

where

line-id UNA-*n*, QNA-*n*, or BNA-*n*, depending on your system.

circuit-id UNA-*n*, QNA-*n*, or BNA-*n*, depending on your system.

The line and circuit must both be ON. If they are not, use the NCP SET LINE and SET CIRCUIT commands to set them to the ON state.

3. Check the DECnet definition of the load host's Ethernet line and circuit with the following NCP commands:

```
NCP>SHOW LINE line-id CHARACTERISTICS
NCP>SHOW CIRCUIT circuit-id CHARACTERISTICS
```

where

line-id UNA-*n*, QNA-*n*, or BNA-*n*, depending on your system.

circuit-id UNA-*n*, QNA-*n*, or BNA-*n*, depending on your system.

The preceding commands display parameters for the line and circuit you specify. Table 1–3 shows the default values for some of these parameters. If the parameters for your line and circuit do not correspond to the values shown, you can change these values with NCP commands.

Table 1–3 Ethernet Line and Circuit Characteristics

Parameter	Value
Line Characteristics	
Protocol	ETHERNET
Circuit Characteristics	
Service	ENABLED
Type	ETHERNET

4. Check that there is enough free disk space to install and use the Gateway software. Installation requires a minimum of 5250 free blocks. If you are installing just the management portion of the Gateway-ST, the system still requires 5250 free blocks for installation, but only 1700 blocks for VAX, and 2250 blocks for AXP are allocated after the installation is complete. See Section 2.1.4 for further details.

5. Enable event logging at the DECnet load host if not already enabled. Event logging records all system and network events or errors. Event logging is also used to diagnose problems that might occur with the Gateway. Use the NCP SET LOGGING command to enable event logging. For complete information on DECnet event logging, refer to the *OpenVMS Networking Manual*.

1.2.3 Access Nodes

The access nodes must be running the OpenVMS version required by the individual access routine. Digital Equipment Corporation recommends installing Gateway Management software on any access node running an application programming interface access routine.

For information on installing individual access routines, refer to the appropriate documentation for that software product.

1.3 Preparing Communications Equipment

The following sections discuss possible combinations of communications equipment you can use for the Gateway-ST. For further information about the products available to you, consult your Digital sales representative.

1.3.1 Connecting the Gateway-ST to Ethernet

As a node in an Ethernet local area network (LAN), the Gateway-ST can be either directly or indirectly connected to the Ethernet. For direct connection to the Ethernet cable, use an Ethernet transceiver, such as an H4005. The H4005 transceiver, with its accessories, connects a single system to the Ethernet cable.

For indirect connection to the Ethernet cable, use a Local Network Interconnect (DELNI). A DELNI can group together more than one Ethernet device and can then connect the devices to the Ethernet using a single line.

These two types of local area network connections appear the same to the Gateway user.

1.3.2 Connecting the Gateway-ST to the SNA Network

The following sections describe the line support available when using the DEC MicroServer-SP or the DEC MicroServer.

DEC MicroServer-SP Line Support

The line interface that connects the DEC MicroServer-SP to the IBM SNA network has one port for one synchronous communication link. The DEC MicroServer-SP can handle data communications speeds of up to 19.2K bps. Table 1–4 shows the line configuration available with the DEC MicroServer-SP.

Table 1–4 DEC MicroServer-SP Port Speeds

Data Speeds (in bits per second)	Number of Lines	Ports
Up to 19.2K bps	1	0

DEC MicroServer Line Support

The line interface that connects the DEC MicroServer to the IBM SNA network has four ports for up to four synchronous communication links. The DEC MicroServer can handle data communication speeds of up to 256K bps. The range of speeds is divided into three bands. In each band, a certain number of the synchronous ports are available for use. Table 1–5 shows the three speed bands, the number of ports available in each band, and the identification of these ports.

Table 1–5 DEC MicroServer Port Speeds

Data Speeds (in bits per second)	Number of Lines	Ports
Up to 64K	4	0,1,2,3
Above 64K to 128K	2	0 and 1
Above 128K to 256K	1	0 only

Use the information in the preceding table in the following way:

1. Determine the maximum line speed you wish to use.
2. Locate the band for that speed in the table.
3. Use only the ports listed for your speed band.

For example, if you use one line at 64K bps and another at 128K bps, the maximum data speed lies in the middle band and only two ports (0 and 1) can be used. Therefore, using a third port at 9600 bps is not supported.

1.3.3 Modems

The SDLC lines used with the DECnet SNA Gateway-ST must be attached to a modem, modem eliminator, or an IBM direct attach line. The type of modem or modem eliminator you need for each line depends on factors such as line speed, duplex setting of the line, distance between modems, and data transfer rate. (For example, a Bell 2096 modem can be used at 9.6K bps full duplex on most networks.) You can use any modem that provides synchronous communication at between 2.4K bps and 256K bps on full-duplex or half-duplex lines. Each communication link connects ultimately to an IBM 37*xx* communications controller.

Note

The Gateway-ST does not provide internal clocking. The Gateway-ST clock parameter *internal* setting is for diagnostic purposes only. The clock parameter is set to *external* as part of the configuration procedures supplied with Gateway-ST.

1.3.4 Adapter Cables

The synchronous communication ports on the Gateway-ST are identical: each is a 50-pin male connector. Depending on modem type, you need one of the adapter cables listed in Table 1–6 to connect the port to the modem:

Table 1–6 Modem Adapter Cables

Modem Interface	Part Number	Description
V.24/EIA-232-D	BS19D-02	25-pin D-Type connector (ISO 2110). Also suitable for the RS-232-C interface with adapter. The adapter enables the adapter cable to be used on RS-232-C lines.
V.35	BC19F-02	34-pin connector with balanced electrical interface.

2

Installing the Gateway-ST Software

This chapter explains how to use VMSINSTAL to install the Gateway-ST software on the load host. Gateway-ST V1.2 combines Gateway management software with the Gateway-ST software. Gateway management software allows you to configure, manage, and down-line load the Gateway-ST after the initial installation.

For information on installing DECnet SNA access routine software, see the documentation for the respective product.

2.1 Preparing to Install the Gateway-ST Software

Before you start an installation that involves writing to your system disk, Digital Equipment Corporation recommends that you make a backup copy of your system disk.

Your bill of materials (BOM) specifies the number and contents of your media. Check the contents of your kit against the list in the BOM. If your kit is damaged or if parts are missing, call your Digital representative.

Distribution volumes must be mounted in numerical order. The installation procedure will prompt you to mount the volumes in proper sequence.

For more information on mounting the distribution media, see the *OpenVMS System Manager's Manual* for your system. This manual describes several options to the installation procedure.

2.1.1 OpenVMS System Tailoring

The DECnet SNA Gateway-ST software supports OpenVMS tailoring for installation on systems with limited system disk space. See the section on OpenVMS tailoring in the DECnet SNA Gateway-ST SSA (System Support Addendum) for a list of necessary OpenVMS system classes. For more information on classes and OpenVMS tailoring, see the OpenVMS operating system Software Product Description (SPD).

2.1.2 Prerequisite Software and Licensing

Version 1.2 of the Gateway-ST requires OpenVMS VAX Version 5.4, or OpenVMS AXP Version 1.5, including the corresponding version of DECnet. You must install the management software on every node that will contain the Gateway-ST software.

Gateway-ST V1.2 supports the OpenVMS License Management Facility (LMF), which requires that a Product Authorization Key (PAK) be registered and loaded before you start the Gateway-ST. Required registration information is contained on the PAK sheet shipped with the Gateway-ST.

To register a license number under OpenVMS, log into the system manager account, SYSTEM. You can choose either of the following two ways to perform the registration:

- At the DCL prompt, invoke SYS$UPDATE:VMSLICENSE.COM. When it prompts you for information, respond with the information from your PAK form.
- At the DCL prompt, issue the LICENSE REGISTER DCL command with the qualifiers that correspond to the PAK information.

For complete information on using LMF, see the manual on the License Management Utility in the OpenVMS VAX V5.4, or OpenVMS AXP V1.5 documentation sets.

2.1.3 On-Line Release Notes

The Gateway-ST installation kit provides on-line release notes. A prompt to display or print the release notes appears when you run VMSINSTAL with the OPTIONS N parameter. You can read the release notes by displaying or printing the file SYS$HELP:SNACST*nnn*.RELEASE_NOTES, where *nnn* represents the major version number and all maintenance updates in that version. The first and second digits represent the major version number, the third digit represents the maintenance update version number. For example, SNACST012.RELEASE_NOTES correspond to Version 1.2 of the Gateway-ST software.

2.1.4 Installation Procedure Requirements

Before you install the Gateway-ST software, verify that the following installation requirements have been met:

Table 2–1 Installation Requirements for Gateway-ST

Requirements	Specifications	
	VAX	AXP
Software	OpenVMS VAX V5.4 or later DECnet/VAX or DECnet/OSI	OpenVMS AXP V1.5 and DECnet for OpenVMS V1.5A
Privileges	System manager level	
Disk Space	5250 blocks	5250 blocks
Process Quota Values	ASTLM = 24 BIOLM = 18 BYTLM = 18000 DIOLM = 18 ENQLM = 30 FILLM = 20	24 18 18000 18 30 20
Approximate Installation Time	15 to 30 minutes depending on the type of medium used and the system configuration	
Associated Documents	The OpenVMS software installation guide for your particular processor	

The Gateway-ST installation also requires the following:

- A unique node name and address for the Gateway node.
- NETPROXY.DAT, SYSUAF.DAT, and RIGHTSLIST.DAT located in SYS$SYSTEM, or you have defined system logical names that point to the location of the files.
- For DECnet/OSI, you must also grant the NET$MANAGE rights identifier to the account from which the configuration SNACSA$CONFIGURE.COM is being performed. The procedure will prompt you for this, and will not run until the identifier is granted.

Note

If NETPROXY.DAT and RIGHTSLIST.DAT do not exist, you have the option of creating them during the Gateway-ST installation.

For background information on installing optional products on an OpenVMS system, refer to the *OpenVMS System Manager's Manual*.

Use the OpenVMS Authorize Utility (AUTHORIZE) to compare your current system quota values with those required for the Gateway-ST. The following example uses an account called SYSTEM.

```
$ SET DEFAULT SYS$SYSTEM Ret
$ RUN AUTHORIZE Ret
UAF> SHOW SYSTEM Ret
```

To change quota values, use the Authorize Utility's MODIFY command. For more information, refer to the *OpenVMS System Manager's Manual*.

2.2 Running the Installation Verification Procedure (IVP)

The Installation Verification Procedure (IVP) for the DECnet SNA Gateway-ST verifies the installation. During the installation, you are asked if you want to run the IVP as part of the installation. If you respond YES, VMSINSTAL runs the IVP. It is recommended that you run the IVP to ensure that the DECnet SNA Gateway-ST software is installed correctly.

After the Gateway-ST software is installed, you can run the IVP independently to verify that the software is available on your system. For example, if the Gateway-ST fails to load, or fails to load properly, you can run the IVP to assist in determining the cause of the problem.

The IVP for the DECnet SNA Gateway-ST is a command procedure that is stored in the directory SYS$TEST after you install the software. To run the IVP interactively after the installation, issue the following command:

```
$ @SYS$TEST:SNACST$IVP
```

Executing this command procedure runs the IVP independent of the installation procedure.

2.3 Installing Files on an OpenVMS System

The procedure for installing files on an OpenVMS system is automated. You simply answer questions displayed while VMSINSTAL runs. Most questions require a simple yes (Y) or no (N) answer. The questions display default answers (where available) in the following way:

```
[YES]:
```

To answer a question with the default YES, press Ret.

To install the distribution kit on your OpenVMS host, do the following:

- Log in to the system manager's account.
- Ensure that all users are logged out and all batch jobs are complete.
- Disable logins and DECnet.
- Check that you have backed up the system disk.
- Verify that you have at least 5250 free blocks on the system disk.

2.3.1 Using VMSINSTAL

VMSINSTAL is a command procedure that installs OpenVMS layered software products. The VMSINSTAL command line has the following format:

```
$ @SYS$UPDATE:VMSINSTAL SNACSTnnn ddcu: [OPTIONS N]
```

nnn
Represents the major version number and all maintenance updates in that version. The first and second digits represent the major version number, and the third digit represents the maintenance update version number. For the version number of your kit, refer to the label on the distribution kit or the BOM. If you do not supply the product name and version number, VMSINSTAL prompts you for them.

***ddcu*:**
Represents a device name for the Gateway-ST installation media; where *dd* is the device code, *c* is the controller id, and *u* is the unit number. It is not necessary to use the console drive. If you do not supply the device name, VMSINSTAL prompts you for it. MTA0: is the device name used in examples in this document.

OPTIONS N
Include this optional parameter if you want to display or print the release notes. If you do not include the OPTIONS N parameter, VMSINSTAL does not prompt you to display or print the release notes. It does, however, copy the release notes to SYS$HELP.

When you install a product using VMSINSTAL, you have two installation options. You can either enter the VMSINSTAL command line specifying the product name, version number, device name, and release notes option as shown in the step-by- step procedure, or you can enter the following command:

```
$ @SYS$UPDATE:VMSINSTAL
```

If you enter the preceding command, VMSINSTAL prompts you for the product name, version number, device name, and options during the installation.

2.4 Installing the Software

This section contains the script you see when running VMSINSTAL to install the Gateway-ST software. This section also contains explanatory text for each prompt.

When you run VMSINSTAL, press the Return key [Ret] to accept the default value. Unless otherwise stated, end every command line by pressing [Ret].

If at any time during the installation, you want to terminate the procedure, press [Ctrl/Y]. This halts the installation procedure and deletes all files created up to that point. To restart the installation procedure after pressing [Ctrl/Y], you must begin again from Step 2.

Enhancements to VMSINSTAL in future releases of the OpenVMS operating system might result in additional prompts appearing during the course of the installation. Although such prompts might not be documented in this installation guide, the installation should proceed normally.

Step 1: Log in to the system manager's account.

```
Ret
Username: SYSTEM Ret
Password: password Ret
```

Step 2: Invoke VMSINSTAL.

```
$ @SYS$UPDATE:VMSINSTAL SNACSTnnn MTA0: OPTIONS N Ret
```

Replace *nnn* in the product name with the version number of the software, for example, SNACST012.

```
      VAX/VMS Software Product Installation Procedure V5.4

It is dd-mmm-yyyy at hh:mm.
Enter a question mark (?) at any time for help.

* Are you satisfied with the backup of your system disk [YES]? Ret
```

If you are satisfied with the backup of your system disk, press [Ret]. Otherwise, type N and press [Ret] to discontinue the installation. Make a backup of your system, and proceed from Step 2.

Step 3: Product installation begins.

VMSINSTAL prompts you to mount the distribution kit volume.

```
The following products will be processed:

  SNACST  Vn.n

 Beginning installation of SNACST Vn.n at hh:mm

%VMSINSTAL-I-RESTORE, Restoring product saveset A...
```

n.n is automatically replaced with the version number of the Gateway-ST software you provide in Step two, in this case V1.2.

Step 4: Select a release notes option.

The following prompts appear only if you specified OPTIONS N in Step 2.

```
Release Notes Options:

    1. Display release notes
    2. Print release notes
    3. Both 1 and 2
    4. Copy release notes to SYS$HELP
    5. Do not display, print, or copy release notes

* Select option [2]: Ret
```

If you select option 1, VMSINSTAL displays the release notes immediately on your screen. You can terminate the display at any time by pressing Ctrl/C.

If you select option 2, VMSINSTAL prompts you for a queue name.

```
* Queue name [SYS$PRINT]: Ret
```

Either type a queue name, or press Ret to send the file to the default output print device.

If you select option 3, VMSINSTAL prompts you for a queue name and then displays the release notes. After the release notes display or print, the following prompt and message appear:

```
Do you want to continue the installation [NO]?: Y Ret
%VMSINSTAL-I-RESTORE, Restoring product saveset A ...
%VMSINSTAL-I-RELMOVED, Product's release notes have been moved to
SYS$HELP.
```

To continue the installation, type Y and press Ret. If you type N and press Ret or just press Ret, VMSINSTAL stops the installation.

Step 5: Select Software Installation Options

The installation procedure now displays the Gateway-ST software installation options:

```
   You can install:

    [1] The Gateway management utilities
    [2] The entire Gateway-ST kit (including management)

* Enter an option [2]: Ret
```

You have two installation options. The default selection (2), installs the entire Gateway-ST software kit. Press Ret to begin this process. Selecting the default option requires that the PAK be registered and loaded. Failure to do this causes the installation process to fail with an error message notifying you that the license must be installed. Refer to the PAK installation procedure in Chapter 1 for further details. In this event, you must restart the installation procedure.

If you want to install just the Gateway-ST management software, enter 1 and press Ret. You do not require a license to install this option.

Step 6: Starting Event Logging

The installation procedure now prompts you to start event logging as follows:

```
* Do you want to start the event logger on this node [YES]? Ret

  Add the following command to your system startup procedures:

   $ @SYS$STARTUP:SNAGM$STARTUP

  You can edit SNAGM$STARTUP.COM if you wish to change whether or not
  the DECnet SNA Event Logger is run on this node or cluster.
```

Press Ret to start event logging. If you want to manually start event logging later, type NO and press Ret. Because the event logger must be running for a DECnet node to log SNA Gateway event messages, Digital recommends that you start the event logger at this time.

Once you respond to the prompt for event logging, the installation procedure prompts you to add event logging and NETTRACE to your system startup file. Doing this causes event logging and NETTRACE to begin automatically at system startup.

If you responded NO to event logging startup, the event logger command in SNAGM$STARTUP.COM is disabled. To enable the command at a later time, edit SNAGM$STARTUP.COM file and remove the exclamation point (!) from in front of the following command:

```
$ @SYS$STARTUP:SNAGM$EVL_STARTUP
```

Step 7: Select NETPROXY options.

The installation procedure now asks you a series of questions.

```
* This product needs a DECnet proxy login database (NETPROXY)
* Do you want to create NETPROXY.DAT [YES]? Ret
%UAF-I-RDBCREMSG, NETPROXY.DAT created
```

If you do not have a NETPROXY file, you must create it. The NETPROXY file contains the proxy login entries. If you type NO, the installation ends; the software is not installed.

If you have a NETPROXY file, the NETPROXY option will not appear.

```
* This product needs a rights database (RIGHTSLIST)
* Do you want to create RIGHTSLIST.DAT [YES]? Ret
%UAF-I-RDBCREMSG, RIGHTSLIST.DAT created
```

If you do not have a RIGHTSLIST file, you must create it. The RIGHTSLIST file is the system rights identifier database. If you type NO, the installation ends; the software is not installed.

If you have a RIGHTSLIST file, the RIGHTSLIST option will not appear.

```
A directory and account must be created for use by the
Gateway software. This account allows only network logins,
and is used by the Gateway for execution of initialization
procedures.  The account details are as follows:

        Directory:      SYS$COMMON:[SNA$CSV]
        Username:       SNA$CSV
        Password:       randomly generated
        UIC:            specified by you

* UIC for SNA$CSV account [56,56]: Ret

%VMSINSTAL-I-ACCOUNT, This installation creates an account named SNA$CSV.
%UAF-I-ADDMSG, user record successfully added
%UAF-I-RDBADDMSGU, identifier SNA$CSV value: [000056, 000056] added to RIGHTSLIST.DAT
%VMSINSTAL-I-ACCOUNT, This installation updates an account named SNA$CSV.
%UAF-I-MDFYMSG, user record(s) updated.
%VMSINSTAL-I-SYSDISK, This product creates system disk directory VMI$ROOT: [SNA$CSV].
```

You are then prompted to specify a UIC for the account where the configuration files reside. A default account of [56,56] is provided. If that default is acceptable, press Ret. You can specify a different UIC if you choose. However, for security reasons, make sure that you specify a unique UIC that is not a system UIC and is not in a group with any other UICs.

You are prompted for a UIC only if the account does not already exist. If the account does exist, you are so informed, and no question is asked.

A directory and an account are created for the configuration files. If the directory SYS$COMMON:[SNA$CSV] already exists, the Gateway-ST uses the existing directory. If the directory SYS$COMMON:[SNA$CSV] does not exist, it is created during the installation procedure.

Step 8: Select the IVP option.

The installation procedure now prompts you to run the Installation Verification Procedure (IVP).

```
You will be prompted to run the IVP as part of this installation, but you
may also manually invoke the IVP at any time by issuing the command:

    $ @SYS$MANAGER:SNACST$IVP

* Do you want to run the IVP after the installation [YES]? Ret
```

The IVP runs tests to check whether the installation procedure was successful. Press Ret to run the IVP after the installation. If you do not want to run the IVP, type N Ret in response to the prompt.

```
* Do you want to purge files replaced by this installation [YES]? Ret
```

The system disk might contain previous versions of the Gateway-ST files. The files are replaced during installation with new files, but the old files are not automatically purged. Digital recommends purging. In response to the purging prompt, press Ret to purge the files, or type N to keep them.

Step 9: Read informational messages.

The installation procedure now displays the following informational messages:

```
No more questions...

To create the initial configuration files for your Gateway, invoke the
configuration procedure, thus:

            $ @SYS$MANAGER:SNACST$CONFIGURE

If this is an update to a previous version, invoke the above configuration
procedure and execute PART 1 of the procedure only. This will define the
gateway node and the new gateway system image in the LOAD HOST's database, but
leave the GATEWAY's DECnet and SNA configuration files unchanged.

%VMSINSTAL-I-MOVEFILES, Files will now be moved to their target directories...
```

If you typed Y in response to the prompt that requests a file purge (Step 8), previous versions of the files are now purged.

If the installation procedure is successful, the executable files are moved to their target directory. Release notes are moved to SYS$HELP and named SNACST012.RELEASE_NOTES.

Step 10: Observe the Installation Verification Procedure.

The installation procedure now calls the IVP to verify that the Gateway-ST software was successfully installed. The system displays the following messages:

```
The DECnet SNA Gateway-ST Vn.n
Installation Verification Procedure.

The IVP checks that the directory SYS$COMMON:[SNA$CSV] was
successfully created, that all Gateway files have been correctly
installed from the kit, and that the username SNA$CSV was
correctly set up.

Executing the IVP ...
Directory ok  ...

Management files ok ...
Gateway files ok...
Username ok ...

IVP for DECnet SNA Gateway-ST Vn.n completed successfully.
```

Step 11: End the installation procedure.

```
Installation of SNACST Vn.n completed at hh:mm

VMSINSTAL procedure done at hh:mm
```

When the installation procedure is complete, you can continue to install more products or end the installation procedure. To end the procedure, press Ctrl/Z or the Ret key.

VMSINSTAL deletes or changes entries in the process symbol tables during the installation. Therefore, if you are planning to continue using the system manager's account and want to restore those symbols, you should log out and log in again.

2.5 Files Created or Modified During Installation

The VMSINSTAL procedure for the Gateway-ST creates the SNA$CSV account and the [SNA$CSV] directory. VMSINSTAL also installs or modifies the files in the locations shown in Table 2–2.

Table 2–2 Files Created During Installation

File Name	Location	Description
SNANCP.HLB	SYS$HELP	SNANCP HELP library
SNATRACE.HLB	SYS$HELP	SNATRACE HELP library
SNATRACEHLP.HLB	SYS$HELP	NETTRACE HELP library
NETTRACE$KEY.INIT	SYS$LIBRARY	NETTRACE Key definitions
NETTRACE$CHAN_ANALYZE.EXE	SYS$LIBRARY	NETTRACE channel trace analyzer
NETTRACE$SDLC_ANALYZE.EXE	SYS$LIBRARY	NETTRACE SDLC trace analyzer
NETTRACE$PU_ANALYZE.EXE	SYS$LIBRARY	NETTRACE PU trace analyzer
NETTRACE$ETHERNET_ANALYZE.EXE	SYS$LIBRARY	NETTRACE ETHERNET trace analyzer (VAX)
NETTRACE$ETHERNET_ANALYZE_TV.EXE	SYS$LIBRARY	NETTRACE ETHERNET trace analyzer (AXP)
NETTRACE$NSP_ANALYZE.EXE	SYS$LIBRARY	NETTRACE NSP trace analyzer (VAX)

(continued on next page)

Table 2–2 (Cont.) Files Created During Installation

File Name	Location	Description
NETTRACE$NSP_ANALYZE_TV.EXE	SYS$LIBRARY	NETTRACE NSP trace analyzer (AXP)
NETTRACE$SNATRAPRE.MAR	SYS$LIBRARY	Translation table prefix file
SNATRATBL.MAR	SYS$LIBRARY	Translation table template
NETTRACE$ETHERNET_ANALYZE.IIF	SYS$LIBRARY	Image Information File for ETHERNETtrace analyzer (AXP)
NETTRACE$NSP_ANALYZE.IIF	SYS$LIBRARY	Image Information File for NSPtrace analyzer (AXP)
NETTRACE_MESSAGES.IIF	SYS$LIBRARY	Image Information File for message file (AXP)
NETTRACE_INSTALL.COM	SYS$MANAGER	Command procedure for starting NETTRACE
NETTRACE_MESSAGES.EXE	SYS$MESSAGE	NETTRACE message file (VAX)
NETTRACE_MESSAGES_TV.EXE	SYS$MESSAGE	NETTRACE message file (AXP)
SNAEVLMSG.EXE	SYS$MESSAGE	SNAEVL message file
SNANCPMSG.EXE	SYS$MESSAGE	SNANCP message file
SNAPMSG.EXE	SYS$MESSAGE	SNAP message file
SNATRCMSG.EXE	SYS$MESSAGE	SNATRACE message file
SNAGM$EVL_STARTUP.COM	SYS$STARTUP	Command procedure for starting SNAEVL
SNAGM$STARTUP.COM	SYS$STARTUP	Gateway Management startup procedure
NETLTC.EXE	SYS$SYSTEM	NETTRACE trace collector image (VAX)
NETLTC_TV.EXE	SYS$SYSTEM	NETTRACE trace collector image (AXP)
NETTRACE.EXE	SYS$SYSTEM	NETTRACE utility (VAX)
NETTRACE_TV.EXE	SYS$SYSTEM	NETTRACE utility (AXP)
SNAEVL.EXE	SYS$SYSTEM	SNA event logging program
SNANCP.EXE	SYS$SYSTEM	SNA network control program
SNAP.EXE	SYS$SYSTEM	SNAP utility
SNATRACE.EXE	SYS$SYSTEM	SNATRACE utility

(continued on next page)

Table 2–2 (Cont.) Files Created During Installation

File Name	Location	Description
SNACST012.SYS	SNA$CSV[1]	Gateway system image
SNACST012.RELEASE_NOTES	SYS$HELP	Release notes
SNACST$CONFIGURE.TLB	SYS$HELP	Configuration help text
SNACST012.STB	SNA$CSV[1]	Gateway symbols file
SNAINI.COM	SNA$CSV[1]	Gateway initialization procedure
SNACST$CONFIGURE.COM	SYS$MANAGER	Gateway configuration file
SNACST$IVP.COM	SYS$TEST	Installation verification procedure

[1] A subdirectory in SYS$COMMON.

The file SNAINI.COM is reserved for Digital use only. Do not attempt to modify this file to include site-specific startup procedures.

All site-specific configuration information should be included in the following generic files, where node is the node name of the processor(s) at your site:

- SNAGATEWAY_node_DNA.COM
- SNAGATEWAY_node_SNA.COM

2.6 Error Conditions

If the installation procedure or IVP fails for any reason, the following message is displayed:

```
%VMSINSTAL-E-INSFAIL, the installation of SNACST Vn.n has failed.
```

Errors may result during the installation if any of the following conditions are true:

- You are using an incorrect version of the OpenVMS operating system (V5.4 or later is required for VAX, V1.5 for AXP).
- The Product Authorization Key (PAK) was not registered and loaded.
- Disk quotas necessary for successful installation are insufficient (see Section 2.1.4).
- Process quotas required by VMSINSTAL are incorrect (see Section 2.1.4).

For descriptions of the error messages generated by these conditions, Refer to the *OpenVMS System Messages and Recovery Procedures*.

If you are notified that any of these conditions exist, you should take the appropriate action as described in the message. You might need to change a system parameter or increase an authorized quota value.

If the installation fails due to an IVP failure, contact your Digital service representative.

2.7 Determining and Reporting Problems

If an error occurs while you are installing the Gateway-ST software and you believe that the error is caused by a problem with the Gateway-ST, you should take one of the following actions:

- If you purchased the Gateway-ST, the warranty period has not expired, and you think the problem is caused by a software error, contact your Digital service representative.
- If you have a BASIC or DECsupport Software Agreement, you should call your Customer Support Center. (With these services, you receive telephone support that provides high-level advisory and remedial assistance. For more information, contact your Digital service representative.)
- If you have a Self-Maintenance Software Agreement, contact your Digital service representative.

If you find an error in the documentation, you should fill out and submit the Reader's Comments form at the back of the document in which you found the error. Specify the section and page number of the error.

2.8 Maintenance Updates

Digital Equipment Corporation periodically issues maintenance updates of the Gateway-ST software. Each update consists of an installation kit. You should install this kit as described in this document or in any documentation that accompanies the maintenance update.

Each time a maintenance update is released, the version number changes. For example, if the current version is 1.1, the version number of the next maintenance update will be 1.2. In addition, the maintenance update usually includes release notes. The release notes describe the changes made to the Gateway-ST software since the previous release.

The updated release notes are provided on line. You can read the release notes before you install the Gateway-ST software and at any time after the product is installed. For information on reading the release notes before the Gateway-ST software is installed, follow the installation procedure up to Step 4

(see Section 2.4). To read the release notes after installing the product, display or print the file SYS$HELP:SNACST012.RELEASE_NOTES.

2.9 Sample Installation

This section contains a sample installation of Gateway-ST V1.2. Note that this is only a sample. The installation procedure might be modified slightly in maintenance updates of this product. Your installation may vary slightly.

Unless otherwise stated, end every command line by pressing Ret.

```
$ SYS$UPDATE:VMSINSTAL SNACST012 MTA0: OPTIONS N Ret

  OpenVMS Software Product Installation Procedure V5.4 for VAX, or
  OpenVMS ALPHA Software Product Installation Procedure V1.5 for AXP


It is 2-APR-1991 at 11:15.
Enter a question mark (?) at any time for help.

%VMSINSTAL-W-DECNET, Your DECnet network is up and running.
* Do you want to continue anyway [NO]? YES Ret
* Are you satisfied with the backup of your system disk [YES]? Ret

The following products will be processed:

  SNACST V1.2
 Beginning installation of SNACST V1.2 at 11:15

%VMSINSTAL-I-RESTORE, Restoring product saveset A...

Release Notes Options:

 1.  Display release notes
 2.  Print release notes
 3.  Both 1 and 2
 4.  Copy release notes to SYS$HELP
 5.  Do not display, print, or copy release notes

* Select option [2]: Ret
* Queue name [SYS$PRINT]: Ret
* Do you want to continue the installation [N]? YES Ret
%VMSINSTAL-I-RELMOVED, The products release notes have been successfully moved
to SYS$HELP.

        You can install:

        [1] The gateway management utilities
        [2] The entire Gateway-ST kit (including management)

* Enter an option [2]: Ret

* Do you want to start the event logger on this node [YES]: Ret

  Add the following command to your system startup procedures:
```

```
   $ @SYS$STARTUP:SNAGM$STARTUP

  You can edit SNAGM$STARTUP.COM if you wish to change whether or not
  the DECnet SNA Event Logger is run on this node or cluster.

* This product needs a DECnet proxy login database (NETPROXY)
* Do you want to create NETPROXY.DAT [YES]? Ret
% UAF-I-RDBCREMSG, NETPROXY.DAT created

* This product needs a rights database (RIGHTSLIST)
* Do you want to create RIGHTSLIST.DAT [YES]? Ret
% UAF-I-RDBCREMSG, RIGHTSLIST.DAT created

A directory and account must be created for use by the
Gateway. This account allows only network logins,
and is used by the Gateway for execution of initialization
procedures. The account details are as follows:

        Directory:   SYS$COMMON:[SNA$CSV]
        Username:    SNA$CSV
        Password:    randomly generated
        UIC:         specified by you

* UIC for SNA$CSV account [56,56]: Ret

%VMSINSTAL-I-ACCOUNT, This installation creates an account named SNA$CSV.
%UAF-I-ADDMSG, user record successfully added
%UAF-I-RDBADDMSGU, identifier SNA$CSV value: [000056,000056] added to RIGHTSLIST.DAT
%VMSINSTAL-I-ACCOUNT, This installation updates an account named SNA$CSV.
%UAF-I-MDFYMSG, user record(s) updated
%VMSINSTAL-I-SYSDISK, This product creates system disk directory VMI$ROOT:[SNA$CSV].

You will be prompted to run the IVP as part of this installation, but you may
also manually invoke the IVP at any time by issuing the command:

 $ @SYS$TEST:SNACST$IVP

* Do you want to run the IVP after the installation [YES]? Ret
* Do you want to purge files replaced by this installation [YES]? Ret

No more questions...

To create the initial configuration files for your Gateway, invoke the
configuration procedure, thus:

 $ @SYS$MANAGER:SNACST$CONFIGURE

If this is an update to a previous version, invoke the above configuration
procedure and execute PART 1 of the procedure only.  This will define the
gateway node and the new gateway system image in the LOAD HOST's database,
but will leave the GATEWAY's DECnet and SNA configuration files unchanged.

%VMSINSTAL-I-MOVEFILES, Files will now be moved to their target directories...

DECnet SNA Gateway-ST V1.2
Installation Verification Procedure.
```

```
The IVP checks that the directory SYS$COMMON:[SNA$CSV] was
successfully created, that all Gateway files have been correctly
installed from the kit, that NETPROXY.DAT and RIGHTSLIST.DAT exist, and
that the username SNA$CSV was correctly set up.

Executing the IVP...
Directory ok...

Management files ok...
Gateway files ok...
Username ok...)

IVP for DECnet SNA Gateway-ST V1.2 completed successfully.

 Installation of SNACST V1.2 completed at 11:18

 VMSINSTAL procedure done at 11:19
```

3
Configuring the Gateway-ST

After installing the entire Gateway-ST software kit on the load host, you must configure the Gateway-ST system. Digital provides a command procedure to assist you with the initial configuration. SNACST$CONFIGURE.COM performs the following steps by using both default information and information that you provide:

1. Defines the Gateway node and SNAINI object in the load host's DECnet database. A copy of the commands you need to define the gateway node is saved in the following file:

   SYS$COMMON:[SNA$CSV]DEFINE_*gateway-node-name*_ON_*load-host-node-name*.COM

   This file remains on the system should you need to re-execute the commands in the future; for example, if you reconfigure DECnet.

2. Creates and displays a command procedure that configures the SNA components in the Gateway database. This procedure contains SNANCP commands and has the following file specification:

   SYS$COMMON:[SNA$CSV]SNAGATEWAY_*gateway-node-name*_SNA.COM

   This file is used every time the Gateway-ST is reloaded.

3. Creates and displays a command procedure that configures DECnet components in the Gateway-ST database. This procedure contains NCP commands and has the following file specification:

   SYS$COMMON:[SNA$CSV]SNAGATEWAY_*gateway-node-name*_DNA.COM

   This file is used every time the Gateway-ST is reloaded.

After the Gateway-ST is initially configured and loaded, you can customize the configuration for your site. Digital provides SNANCP and NCP commands that you can enter interactively to change the characteristics of your system. For descriptions of how to use these commands, refer to *DECnet SNA Gateway-CT and Gateway-ST Management*.

When you enter commands interactively, the definitions or changes you make take effect immediately. However, these definitions or changes stay in effect only while the Gateway-ST is running. When the Gateway-ST is reloaded, the values used are those in the command procedures that you created during the initial configuration.

Digital suggests the following procedure for reconfiguring your Gateway-ST system. Use interactive commands to make changes to the Gateway-ST system while it is running. If you want to keep those changes, edit the appropriate command procedures to change the default values and reload the system.

Note

The following commands and examples are based on the configuration of a DECnet/VAX system, and may be different from DECnet/OSI. See Section 3.4 for a complete sample configuration of a DECnet/OSI system. Also, refer to the *DECnet/OSI NCL Reference Manual* for more information on NCL commands.

3.1 Preparing to Configure the Gateway-ST

The Gateway-ST configuration procedure is in the file SNACST$CONFIGURE.COM in the SYS$MANAGER directory. During the execution of SNACST$CONFIGURE.COM, the system prompts you for information about the Gateway node, the Gateway components, and the Gateway DECnet database. Example 3–1 lists the specific information you need for communication between the Gateway-ST and the SNA network. Use Example 3–1 as a reference, and collect the appropriate information for each component you intend to define before running SNACST$CONFIGURE.COM.

Example 3–1 Information for Configuring the Gateway-ST

```
                          GATEWAY CONFIGURATION INFORMATION
                             Gateway Node Name: _____________________
------------------------------------------------------------------------------
                        Part 1: Gateway Definition in Load Host

    DECnet SNA Gateway Node Name:
    DECnet SNA Gateway Node Address:
    Ethernet Hardware Address:
    Ethernet Circuit Name (Host):
------------------------------------------------------------------------------
                        Part 2: SNA Database in the Gateway

Line SYN-n
    Half or Full Duplex:
    Multidropped line  :
    NRZI Signaling    :
    Modem Type    :
    MAXDATA Size:
------------------------------------------------------------------------------
Circuit SDLC-n
    Extended Response Mode:
    Full or Half Duplex   :
    Station Address       :
    Station Identifier    :
------------------------------------------------------------------------------
PU SNA-n
              LU List:
------------------------------------------------------------------------------
Access Names for PU SNA-n
    Access name:
    LU list:
    IBM application name:
    IBM logon name:
    IBM user data:
------------------------------------------------------------------------------
Server
    LU List for DHCF:
------------------------------------------------------------------------------
                        Part 3: DECnet Database in the Gateway

    Privileged Username:
    Privileged Password:
```

3.2 Configuring the Software

The following sections display the prompts you see while running SNACST$CONFIGURE.COM and explain the information you are asked to provide.

Once you have gathered the information shown in Example 3–1 for each component you want to configure, you can start the configuration procedure.

If you are upgrading your Gateway-ST software, complete part one in Section 3.2.1 only. You should skip over parts two and three by replying to the system prompts. If you are performing a completely new installation, you should complete all three steps.

To run the configuration procedure, log in to the SYSTEM account, and then enter the following command:

```
$ @SYS$MANAGER:SNACST$CONFIGURE
```

To get help during the procedure, enter a ? (question mark) in response to any prompt that you do not understand. Information about the prompt displays on the screen.

When you run the configuration procedure, substitute your own values for the values shown. To take the default value, press the Ret key. Unless otherwise stated, end every command line by pressing Ret.

3.2.1 Introductory Remarks

When you start the configuration procedure, you see the following display:

```
SNACST$CONFIGURE V1.2 DECnet SNA Gateway-ST configuration procedure.

Configuration is divided into three parts:

.       Part 1: Define the Gateway node in the load host's
                DECnet database.

.       Part 2: Create a command file that will be used to
                configure the SNA database in the Gateway
                each time it is loaded.

.       Part 3: Create a command file that will be used to
                configure the DECnet database in the Gateway
                each time it is loaded.

This configuration procedure prompts you to see if you want
to run each of the three parts.  All parts must be completed
before the Gateway can be loaded. Enter "?" at any time for
help.
```

3.2.2 Gateway Node Name

```
DECnet SNA Gateway-ST node name  [] :
```

When you see the prompt for a Gateway node name, type 1 to 6 alphanumeric characters. The name must be unique within the DECnet network.

3.2.3 Part 1: Information for the Gateway Node Definition

The DECnet database on the load host needs information about the Gateway node for the following two processes:

- Loading the Gateway node
- Dumping from the Gateway node

This part of the configuration also defines the SNAINI object and creates a proxy account for the Gateway-ST initialization. The proxy account maps the remote username, *gateway_name*::SNA$GO, to the local username, SNA$CSV.

If you intend to use more than one member of an VMScluster as a load host, you must execute this part of the configuration procedure on each individual load host. This is necessary because the load host's DECnet SERVICE CIRCUIT parameter is hardware dependent.

You see the following prompt at the beginning of Part 1:

```
Define the Gateway node in load-host-name's DECnet database?
(Y|N) [Y]:
```

If you are certain that the load host already has the Gateway node definition, and that the SNAINI object and the appropriate proxy login information are defined (from a previous installation), type N. If you type Y, the system prompts you for the information in the following sections. The default answer is Y.

3.2.3.1 DECnet Address of the Gateway Node

```
DECnet node address of gateway-node-name ([aa.]nnnn) []:
```

Specify the DECnet address of the Gateway node in the following way:

aa Specifies the (optional) DECnet area number and is a decimal number ranging from 1 to 63.

nnnn Specifies the DECnet node number and is a decimal number ranging from 1 to 1023.

3.2.3.2 Dump File Device and Directory

```
Device and directory for dump file [SYS$COMMON:[SNA$CSV]]:
```

Specify the device and directory on the load host that will contain the dump file if the Gateway node performs an up-line dump. The dump file is not created until it is required.

The default device and directory is SYS$COMMON:[SNA$CSV]. Ensure that the specified device always has enough free space for the dump file. Each version of the dump file is approximately 4500 blocks. If less than 4500 blocks are available on the specified device, a warning message is issued.

3.2.3.3 Ethernet Hardware Address

```
Ethernet hardware address (12 hex digits) []:
```

Specify the Ethernet hardware address of the Ethernet port for the Gateway node. Enter this address either as 12 hexadecimal digits or as six pairs of hexadecimal digits separated by hyphens. For example, these two expressions specify the same address:

```
08002B08E3BE
08-00-2B-08-E3-BE
```

3.2.3.4 Ethernet Circuit

```
Host's Ethernet circuit name (circuit-id) [dev-c]:
```

Specify the name of the Ethernet circuit that connects the load host to the Gateway-ST. The Gateway node makes service requests for loading and dumping on this circuit.

3.2.3.5 End of Part 1

When you have answered all the questions for Part 1 of the configuration procedure, the following informational messages are displayed:

```
All questions for this section have been answered.

The following NCP commands will be used to define the Gateway
node and SNAINI object in the load host's DECnet database.
In addition, a proxy login will be established for the Gateway
initialization process.
```

SNACST$CONFIGURE displays the commands that are used to define the Gateway node in the DECnet permanent database on the load host. The system then asks:

```
Are you satisfied with these answers? (Y|N) [Y]:
```

If you type Y, the command procedure that immediately follows the question executes the commands.

If you type N, you can provide different values for the configuration.

NOTE

The following message might appear:

```
%NONAME-W-NOMSG, Message number 00000000
```

You can safely ignore this message.

After the NCP commands execute, the following prompt appears:

```
Do you wish to redo this section? (Y|N) [N]:
```

If you type Y, this part of the configuration is run again, and you can provide different values for the items. N is the default.

If you type N, you see the following message:

```
The file you have created has been saved in:
SYS$COMMON:[SNA$CSV]DEFINE_gateway-node-name_ON_load-host-node-name.COM
This command file may be used to redefine the Gateway node
and SNAINI object in the load host's DECnet database,
should you need to do so at some future time.
```

You can now proceed to Part 2 of the configuration procedure.

3.2.4 Part 2: Information About Gateway Components

In Part 2 of the configuration procedure, you specify parameters for the following Gateway-ST components:

- Lines
- Circuits
- Physical units (PUs)
- Access names
- Servers

The information you provide goes into the following configuration file in the form of SNANCP commands:

```
SYS$COMMON:[SNA$CSV]SNAGATEWAY_gateway-node-name_SNA.COM.
```

This configuration file initializes the SNA components each time the Gateway-ST is loaded. You can edit this file to customize your configuration.

If you edit this file, you must make sure that the statement that sets the line, circuit and PU characteristics appears before the statement that sets the line and circuit states to ON.

At the beginning of Part 2 the system prompts you as follows:

```
Do you wish to create this command file? (Y|N) [Y]:
```

If you type Y, you are prompted to define the number of lines configured:

```
Number of lines to be configured (1-4) [1]:
```

Note

If you are using a DEC MicroServer-SP, do not attempt to configure more than one line.

3.2.4.1 Lines

The line parameters in this section define the physical lines the Gateway uses to transfer data to the IBM communications controller.

For each line you configure, you will see the following identifying banner:

```
+--------------------------+
|        Line SYN-n        |
+--------------------------+
```

- Line Duplex

  ```
  Is the line full duplex? (Y|N) [N] :
  ```

  The line duplex controls modem signaling. The duplex mode of the line can be HALF (half duplex) or FULL (full duplex). Type YES if you want the mode to be FULL. The mode must be the same as that defined for the IBM modem. To determine the IBM modem setting, refer to the DUPLEX and ADDRESS parameters for the IBM ACF/NCP LINE macro.

  Note

  This line duplex parameter sets only the physical characteristics of the communications line, not the data transfer mode. To set the data transfer mode, see the corresponding CIRCUIT parameter (Section 3.2.4.2).

- Multidropped

  ```
  Is the line multidropped? (Y|N) [N]:
  ```

  Specify the data line protocol to be used on the line. Type Y (YES) if the line is a tributary end of a SDLC multipoint link. Press Ret if the line is one end of a point-to-point SDLC link.

  Note

  When using the Gateway-ST, half-duplex lines are always point-to-point SDLC links.

- Signaling convention

  ```
  Does the line use NRZI signaling? (Y|N) [N]:
  ```

  Specify the signaling convention to be used on the line. Type YES if the line uses non-return-to-zero inverted (NRZI) bit encoding; press Ret if not. This setting must correspond with the NRZI parameter setting for the IBM ACF/NCP LINE macro.

- Modem type

  ```
  Is the modem an IBM diagnostic modem? (Y|N) [N]
  ```

  Specify whether the modem is an IBM diagnostic modem. If the line uses modems without diagnostics, press Ret. The default, which is NO, specifies a modem that does not have diagnostic capabilities.

  This parameter controls how the Gateway device driver interprets the Test Indicator (TI) modem lead (CCITT 142). IBM diagnostic modems use this lead to indicate the modem is handling signals from a host Link Problem Determination Aid (LPDA) test.

  Caution

  If you are not using IBM diagnostic modems, be sure to answer NO to the prompt (that is, set the modem to NORMAL operations). Some modems provide a clocking signal on the TI lead. If the modem type is set to DIAGNOSTIC, any clocking signals on the TI lead will severely degrade the performance of the Gateway.

- MAXDATA size

  ```
  MAXDATA size (bytes) [265] :
  ```

This value must match that specified for MAXDATA in the IBM ACF/NCP PU macro. Obtain this value from the IBM systems programmer. The value you specify for MAXDATA size sets the RECEIVE BUFFER size and the PU SEGMENT size. The default is 265.

3.2.4.2 Circuits

After prompting you for line parameters, the configuration procedure prompts for circuit information. The circuit controls the flow of data over the physical line. The IBM Synchronous Data Link Control (SDLC) line protocol is used over the lines from the Gateway to the IBM system.

For each circuit you configure, you will see the following identifying banner and configuration question:

```
+--------------------------+
|     Circuit SDLC-n       |
+--------------------------+
```

- Response mode

  ```
  Extended response mode on circuit? (Y|N) [N] :
  ```

  Specify whether the circuit operates with NORMAL (modulo 8) or EXTENDED (modulo 128) frame numbering. Modulo 128 frame numbering is supported only on IBM ACF/NCP V4 or later. The setting must correspond with the MODULO parameter for the IBM ACF/NCP LINE macro.

- Circuit duplex

  ```
  Is the data transfer mode full duplex? (Y|N) [N] :
  ```

  The circuit duplex specification controls how the data is transferred. Specify whether the data transfer is to be two-way simultaneous (FULL) or two-way alternate (HALF). On a circuit in FULL duplex mode, frames can be sent and received at the same time. On a HALF duplex mode circuit, each end must wait until the other end has finished sending before it can send.

  The circuit duplex must agree with the DATMODE parameter in the IBM ACF/NCP GROUP or PU macro. If the DATMODE parameter is specified as FULL, the circuit is full duplex and if the DATMODE parameter is specified as HALF, the circuit is half duplex.

  The following combinations of circuit duplex and line duplex are allowed:

  - A full-duplex line and a full-duplex circuit
  - A full-duplex line and a half-duplex circuit

- A half-duplex line and a half-duplex circuit

  Remember, for full-duplex data transfer, not only the line but also the circuit must be operating in full-duplex mode. If you set the circuit to FULL, the corresponding line duplex parameter must also be set to FULL. However, you can run a half-duplex circuit over a full-duplex line if you wish.

- Station address

  ```
  Station address (2 hex digits) [01] :
  ```

  Specify the SDLC station address. Enter two hexadecimal digits. The value must correspond with the ADDR parameter setting for the IBM ACF /NCP PU macro. The default address is 01.

- Station identifier

  ```
  Station identifier (8 hex digits) [00000000] :
  ```

  The SDLC station identifier (XID) is used on dial-up (switched) lines to verify the identity of the station. Specify the identifier as eight hexadecimal digits. The first three digits must correspond with the setting of the IDBLK parameter for IBM ACF/VTAM PU macro. The last five digits must correspond with the setting of the IDNUM parameter for the IBM ACF/VTAM PU macro.

3.2.4.3 Physical Units

The configuration procedure prompts for PU information for the circuit(s). Physical units (PUs) provide the physical services for the Gateway node.

For each PU you configure, you will see the following identifying banner and configuration question:

```
+--------------------------+
|          PU SNA-n        |
+--------------------------+
```

- LU list

  ```
  Enter the list of available LU addresses (number or range) [1-255]:
  ```

  The LU list specifies the logical units (LUs) that are defined for the PU; the number of defined LUs is not equal to the number of concurrent sessions supported by the Gateway-ST (see the Gateway-ST Release Notes). Enter the LUs as a list of decimal number ranges separated by commas. For example, define LUs 1 through 10, LU 12, and LUs 20 through 30 as follows:

```
1-10,12,20-30
```

A process on the SNA host node can use only those LUs defined in the list. Any request for communication with an LU not in the list is rejected. The LUs listed must correspond with the LU addresses defined in the LOCADDR parameter for the IBM ACF/VTAM LU macro.

3.2.4.4 Access Names

An access name is a name assigned by the Gateway manager to represent a list of parameters that define a session with the IBM system. Refer to the documentation for the individual DECnet SNA access routines for specific information on using access names.

For each PU you configure, you will see the following identifying banner and configuration question:

```
+--------------------------+
|Access names for PU SNA-n |
+--------------------------+
```

```
You will now be prompted for one or more access names.
Press <RETURN> when you have no more to enter.

Access name (1-16 chars)[]:
```

Enter the access name as 1 to 16 alphanumeric characters; for example, CICS.

If you type an access name, additional prompts appear. After you define all the information for a particular access name, the initial access name prompt appears again. If you enter a second access name, the process begins again, starting with the prompt for LU list.

When you have finished defining access names, press Ret in response to the access name prompt. If there are more circuits to be configured, SNACST$CONFIGURE returns to the questions in Section 3.2.4.2. If there are no more circuits to be configured, SNACST$CONFIGURE proceeds to the server questions in Section 3.2.4.5.

The prompts for access names are:

- LU list

  ```
  LU list     (number or range)[]:
  ```

  A list of LU addresses allocated to session requests using the access name. Enter a list of numbers and/or number ranges separated by commas. For example, the following list specifies LUs 1 through 10, LU 15, and LUs 20 through 30 for sessions using the access name specified:

```
1-10,15,20-30
```

- IBM application name

  ```
  IBM application name    (1-8 chars)[]:
  ```

  The name of the IBM application for the access name. Enter 1 through 8 alphanumeric characters. Sessions established with this access name connect to the designated IBM application. If you need to specify this parameter, ask the IBM systems programmer for the name.

- IBM logon mode name

  ```
  IBM logon mode name (1-8 chars)[]:
  ```

  Enter 1 through 8 alphanumeric characters to specify an IBM ACF/VTAM Logon Mode Table entry for use at the start of each session. The Logon Mode Table entry can specify the protocol rules for the session. If you specify no logon mode name, the default entry for the LU address as defined on the IBM system is used. The name should correspond with the operand label of an IBM ACF/VTAM MODEENT macro.

- IBM user data

  ```
  IBM user data (1-32 chars)[]:
  ```

  Enter 1 through 32 characters. This specifies an optional string of user data, which will be passed to the session partner. The format of the data is specific to the IBM application acting as the session partner. Check with the IBM systems programmer for the requirements of this field.

3.2.4.5 Servers

After you define all your lines and their associated PUs, LUs, and access names, the configuration procedure prompts you to define information about the DHCF server.

All parameters for the SNA-ACCESS and RJE servers are automatically defined by the system. (After initial configuration, use SNANCP commands to modify any server information.) In addition, the configuration procedure defines all parameters for the DHCF server except for LU list information. The configuration procedure prompts you for this optional DHCF information. If you are not using a DHCF server, press Ret at the prompt.

An identifying server banner and configuration questions appear:

```
                +-----------+
                |  Servers  |
                +-----------+

Server SNA-ACCESS
No questions for this server.

Server RJE
No questions for this server.

Server DHCF
You will now be prompted for the list of LUs allocated to DHCF for each PU.
Press <RETURN> if you do not wish to define any LU for a given PU.

LU list allocated to DHCF for PU SNA-0 (number or range) []:
```

Enter a list of LUs to be allocated to the DHCF server, for example, 20–30. If the number of LUs allocated exceeds the total number of DHCF sessions allowed, this command will be rejected.

3.2.4.6 End of Part 2

When you have answered all the questions for Part 2 of the configuration, the following informational messages appear:

```
All questions for this section have been answered.

The following SNANCP commands will be used to set the SNA database
in the Gateway each time it is loaded.
```

The system then displays the SNANCP commands in the configuration file.

The file that is displayed contains both information you specified for the SNA components and default system information.

After displaying the command procedure, the system prompts you as follows:

```
Do you wish to redo this section? (Y|N) [N]:
```

If you type Y, this part of the configuration is run again, and you can provide different values at the prompts.

If you press Ret, you see the following message:

```
The file you have created has been saved in:

        SYS$COMMON:[SNA$CSV]SNAGATEWAY_gateway-node-name_SNA.COM

You can edit this command file to change the configuration
of the SNA database in the Gateway. Any changes you make will
take effect the next time the Gateway is reloaded.
```

This configuration file is used to initialize the Gateway-ST whenever it is loaded. The procedure continues with Part 3.

3.2.5 Part 3: Information About the Gateway DECnet Database

In Part 3 of the configuration procedure, you provide information for the DECnet database in the Gateway-ST. This information creates the following configuration file that contains NCP commands:

SYS$COMMON:[SNA$CSV]SNAGATEWAY_*gateway-node-name*_DNA.COM.

This configuration file initializes the DECnet database components in the Gateway-ST each time the Gateway-ST is loaded. You can edit this file to customize your configuration.

Each time the Gateway software is loaded, the Gateway node performs the following steps to initialize the database:

- Reads all the nodes defined in the DECnet database on the load host that are in its area (that is, nodes that have the same DECnet area number as the Gateway node).
- Defines all the nodes in the same DECnet area in the Gateway node's DECnet database.
- Requests that the load host execute the command procedure that you create in this section of the configuration procedure. This file specifies the privileged username and password for access control of the Gateway-ST.

The DECnet database on the Gateway-ST is a combination of the default node database, which is created by the Gateway software, and the information you provide in Part 3 of the configuration procedure. You can customize the database that is created in this initial configuration by editing the DECnet database configuration file:

SYS$COMMON:[SNA$CSV]SNAGATEWAY_*gateway-node-name*_DNA.COM

Use an editor to change the NCP commands in this file. For example, to define an additional node name for the node database, add a NCP SET NODE command.

At the beginning of Part 3, the system prompts:

```
Do you wish to create this command file? (Y|N) [Y]:
```

If you type Y, you are prompted for the information in the following section.

3.2.5.1 Privileged Username and Password

The two following prompts ask for a privileged username and password:

```
Privileged username?  (1-16 chars) []:
Privileged password?  (1-16 chars) []:
```

For each prompt, enter 1 through 16 alphanumeric characters.

The privileged user name and password control access to the following Gateway functions:

- NCP CLEAR, LOOP, SET, and ZERO commands
- SNANCP CLEAR, LOOP, SET, SHOW LU (for authorization information), and ZERO commands
- SNATRACE commands

3.2.5.2 End of Part 3

When you have answered all the questions for Part 3 of the configuration, the following informational messages appear:

```
All questions for this section have been answered.

The following NCP commands will be used to set the DECnet
database on the Gateway each time the Gateway is loaded.
```

The system then displays the NCP commands in the Gateway-ST's DECnet database configuration file.

After displaying the command procedure, the system prompts you as follows:

```
Do you wish to redo this section? (Y|N) [N]:
```

If you type Y, this part of the configuration is run again, and you can provide different values at the prompts.

If you press Ret, you see the following message:

```
The file you have created has been saved in:

        SYS$COMMON:[SNA$CSV]SNAGATEWAY_gateway-node-name_DNA.COM

You can edit this command file to change the configuration
of the DECnet database in the Gateway. Any changes you make will
take effect the next time the Gateway is reloaded.
```

SNACST$CONFIGURE finishes with the following messages:

```
You have now completed the three parts of the Gateway configuration
procedure. The files you have created will be used to configure
the Gateway each time it is loaded.

** End of SNACST$CONFIGURE V1.2
```

3.3 Sample DECnet/VAX Configuration

This section contains a sample configuration in which one line, one circuit, one PU, and one access name are defined. Note that this is only a sample. The actual configuration procedure could be modified slightly in maintenance updates of this product.

The file displayed in this sample contains both information you specified for the SNA components and default system information.

If you are defining more than one component, the configuration procedure prompts you to specify the characteristics of each individual component.

Unless otherwise stated, end every command line by pressing Ret.

```
$ @sys$manager:snacst$configure.com Ret

          SNACST$CONFIGURE V1.2 DECnet SNA Gateway-ST configuration procedure.

        Configuration is divided into three parts:

        .       Part 1: Define the Gateway node in the load host's
                        DECnet database.

        .       Part 2: Create a command file that will be used to
                        configure the SNA database in the Gateway
                        each time it is loaded.

        .       Part 3: Create a command file that will be used to
                        configure the DECnet database in the Gateway
                        each time it is loaded.

        This configuration procedure prompts you to see if you want
        to run each of the three parts.  All parts must be completed
        before the Gateway can be loaded. Enter "?" at any time for
        help.

DECnet SNA Gateway-ST node name [] : SNAGWY Ret

================================================================================
  Part 1: Define the Gateway node in the load host DECnet database
================================================================================
```

```
Define the Gateway node in CLOCK's DECnet database? (Y|N) [Y] : Ret

DECnet node address of SNAGWY (nnnn) [] : 4.443 Ret
Device and directory for dump file [SYS$COMMON:[SNA$CSV]]: Ret
Ethernet hardware address (12 hex digits) [] : 08-00-2B-08-CC-B3 Ret
Host's Ethernet circuit name (circuit-id) [BNA-0] : Ret

        All questions for this section have been answered.

        The following NCP commands will be used to define the Gateway
        node and SNAINI object in the load host's DECnet database.
        In addition, a proxy login will be established for the Gateway
        initialization process.

$!+-+-+-+-+-+-+-+-+-+-+-+-+-+-+-+-+-+-+-+-+-+-+-+-+-+-+-+-+-+-+-+-+-+-+-+-+-+-+-+-+-+-+-+-+-+-+
$! Start of file: SYS$COMMON:[SNA$CSV]DEFINE_SNAGWY_ON_CLOCK.COM
$! DECnet SNA Gateway-ST -- load host database setup
$! Created: 10-JUN-1989 16:25:46.00 by SNACST$CONFIGURE V1.2
$! Host node: CLOCK   User: SYSTEM
$!+-+-+-+-+-+-+-+-+-+-+-+-+-+-+-+-+-+-+-+-+-+-+-+-+-+-+-+-+-+-+-+-+-+-+-+-+-+-+-+-+-+-+-+-+-+-+
$ v = f$verify(1)
$ DEFINE/USER SYS$OUTPUT _NLA0:
$ DEFINE/USER SYS$ERROR _NLA0:
$ RUN SYS$SYSTEM:NCP
PURGE OBJECT SNAINI ALL
PURGE NODE SNAGWY ALL
PURGE NODE 4.443 ALL
CLEAR OBJECT SNAINI ALL
CLEAR NODE SNAGWY ALL
CLEAR NODE 4.443 ALL
$ RUN SYS$SYSTEM:NCP
DEFINE OBJECT SNAINI NUMBER 39 -
       FILE SYS$COMMON:[SNA$CSV]SNAINI.COM PROXY INCOMING
DEFINE NODE 4.443 NAME SNAGWY
DEFINE NODE SNAGWY HARDWARE ADDRESS 08-00-2B-08-CC-B3 -
     LOAD FILE SYS$COMMON:[SNA$CSV]SNACST012.SYS -
     DUMP FILE SYS$COMMON:[SNA$CSV]SNAGWY.DMP -
     SERVICE CIRCUIT BNA-0 -
     ACCESS BOTH
DEFINE CIRCUIT BNA-0 SERVICE ENABLED
SET OBJECT SNAINI ALL
SET NODE SNAGWY ALL
$ EXIT $STATUS + (0 * 'f$verify(v)')
$!+-+-+-+-+-+-+-+-+-+-+-+-+-+-+-+-+-+-+-+-+-+-+-+-+-+-+-+-+-+-+-+-+-+-+-+-+-+-+-+-+-+-+-+-+-+-+
$! End of File: SYS$COMMON:[SNA$CSV]DEFINE_SNAGWY_ON_CLOCK.COM
$!+-+-+-+-+-+-+-+-+-+-+-+-+-+-+-+-+-+-+-+-+-+-+-+-+-+-+-+-+-+-+-+-+-+-+-+-+-+-+-+-+-+-+-+-+-+-+
```

```
Are you satisfied with these answers? (Y|N) [Y] : Ret

Creating proxy login for SNAGWY::SNA$GO
%UAF-I-NAFADDMSG, record successfully added to NETPROXY.DAT
%NONAME-W-NOMSG, Message number 00000000

$ DEFINE/USER SYS$OUTPUT _NLA0:
$ DEFINE/USER SYS$ERROR _NLA0:
$ RUN SYS$SYSTEM:NCP
PURGE OBJECT SNAINI ALL
PURGE NODE SNAGWY ALL
PURGE NODE 4.443 ALL
CLEAR OBJECT SNAINI ALL
CLEAR NODE SNAGWY ALL
CLEAR NODE 4.443 ALL
$ RUN SYS$SYSTEM:NCP
DEFINE OBJECT SNAINI NUMBER 39 -
FILE SYS$COMMON:[SNA$CSV]SNAINI.COM PROXY INCOMING
DEFINE NODE 4.443 NAME SNAGWY
DEFINE NODE SNAGWY HARDWARE ADDRESS 08-00-2B-08-CC-B3 -
       LOAD FILE SYS$COMMON:[SNA$CSV]SNACST012.SYS -
       DUMP FILE SYS$COMMON:[SNA$CSV]SNAGWY.DMP -
       SERVICE CIRCUIT BNA-0 -
       ACCESS BOTH
DEFINE CIRCUIT BNA-0 SERVICE ENABLED
SET OBJECT SNAINI ALL
SET NODE SNAGWY ALL

%%% Warning - service must be enabled on circuit BNA-0.

    The configuration procedure has defined the correct service state
    in the permanent database, but it cannot change the running system.
    You must turn the circuit off and then use the NCP command
                SET CIRCUIT BNA-0 SERVICE ENABLED
    before this node can load the gateway system.

Do you wish to redo this section? (Y|N) [N] : Ret

        The file you have created has been saved in:

        SYS$COMMON:[SNA$CSV]DEFINE_SNAGWY_ON_CLOCK.COM

        This command file may be used to redefine the Gateway node
        and SNAINI object in the load host's DECnet database,
        should you need to do so at some future time.
```

```
================================================================================
  Part 2: Create a command file to configure the SNA database in the Gateway
================================================================================

Do you wish to create this command file? (Y|N) [Y] : Ret

Number of lines to be configured (1-4) [1] : 1 Ret

                        +---------------+
                        |   Line SYN-0  |
                        +---------------+

Is the line full duplex? (Y|N) [N] : Ret
Is the line multidropped? (Y|N) [N] : Ret
Does the line use NRZI signaling? (Y|N) [N] : Ret
Is the MODEM an IBM diagnostic MODEM? (Y|N) [N] : Ret
MAXDATA size? (bytes) [265] : Ret
                        +---------------+
                        |Circuit SDLC-0 |
                        +---------------+

Extended Response mode on circuit? (Y|N) [N] : Ret
Is the data transfer mode full duplex? (Y|N) [N] : Ret
Station address (2 hex digits) [01] : Ret
Station identifier (8 hex digits) [00000000] : 8760EB13 Ret

                        +---------------+
                        | PU SNA-0      |
                        +---------------+

Enter the list of available LU addresses (number or range) [1-255] : Ret

                    +---------------------------+
                    |Access names for PU SNA-0  |
                    +---------------------------+

You will now be prompted for one or more access names.
Press <RETURN> when you have no more to enter.

Access name (1-16 chars)   [] : cics Ret
LU List (number or range)  [] :: 1-5 Ret
IBM Application name (1-8 characters) []:: CICS17 Ret
IBM logon mode name (1-8 characters) []: Ret
IBM user data (1-32 characters) []: Ret
Access name (1-16 chars)   [] : Ret

                    +-----------+
                    |  Servers  |
                    +-----------+

Server SNA-ACCESS
No questions for this server.

Server RJE
No questions for this server.
```

```
Server DHCF
You will now be prompted for the list of LUs allocated to DHCF for each PU.
Press <RETURN> if you do not wish to define any LU for a given PU.

LU list allocated to DHCF for PU SNA-0 (number or range) [] : 20-30 Ret

        All questions for this sections have been answered.

        The following SNANCP commands will be used to set the SNA database
        in the Gateway each time it is loaded.

$!+-+-+-+-+-+-+-+-+-+-+-+-+-+-+-+-+-+-+-+-+-+-+-+-+-+-+-+-+-+-+-+-+-+-+-+-+-+-+-+-+
$! Start of File: SYS$COMMON:[SNA$CSV]SNAGATEWAY_SNAGWY_SNA.COM
$! DECnet SNA Gateway-ST SNA configuration file
$! Created: 16-JUN-1989 16:27:09.83 by SNACST$CONFIGURE V1.2
$! Host node: CLOCK  User: SYSTEM
$!+-+-+-+-+-+-+-+-+-+-+-+-+-+-+-+-+-+-+-+-+-+-+-+-+-+-+-+-+-+-+-+-+-+-+-+-+-+-+-+-+
$ v = f$verify(1)
```

```
$ RUN SYS$SYSTEM:SNANCP
SET LINE SYN-0 -
   DUPLEX HALF -
   PROTOCOL SDLC POINT -
   SIGNALING NORMAL -
   CLOCK EXTERNAL -
   MODEM TYPE NORMAL -
   RECEIVE BUFFERS 16 -
   LOGGING ALL -
   BUFFER SIZE 265
SET CIRCUIT SDLC-0 -
   LINE SYN-0 -
   DUPLEX HALF -
   RESPONSE MODE NORMAL -
   STATION ADDRESS 01 -
   LOGGING ALL -
   STATION ID 8760EB13
SET PU SNA-0 CIRCUIT SDLC-0 -
   LU LIST 1-255 -
   SEGMENT SIZE 265 -
   LOGGING WARNING LOGGING ERROR
SET LINE SYN-0 STATE ON
SET CIRCUIT SDLC-0 STATE ON
SET ACCESS NAME CICS -
   LU LIST 1-5 -
   APPLICATION CICS17 -
   PU SNA-0
SET SERVER SNA-ACCESS -
   LOGGING WARNING LOGGING ERROR -
   NOTE "Gateway Access Server" -
   STATE ON
SET SERVER RJE -
   LOGGING WARNING LOGGING ERROR -
   NOTE "Remote Job Entry" -
   STATE ON
SET SERVER DHCF -
   PU SNA-0 LU LIST 20-30 -
   LOGGING WARNING LOGGING ERROR -
   NOTE "Host Command Facility" -
   STATE ON
$ EXIT $STATUS + (0 * 'f$verify(v)')
$!+-+-+-+-+-+-+-+-+-+-+-+-+-+-+-+-+-+-+-+-+-+-+-+-+-+-+-+-+-+-+-+-+-+-+-+-+-+-+-+-+-+-+-+-+-+-+-+-+-+-+
$! End of File: SYS$COMMON:[SNA$CSV]SNAGATEWAY_SNAGWY_SNA.COM
$!+-+-+-+-+-+-+-+-+-+-+-+-+-+-+-+-+-+-+-+-+-+-+-+-+-+-+-+-+-+-+-+-+-+-+-+-+-+-+-+-+-+-+-+-+-+-+-+-+-+-+
```

```
Do you wish to redo this section? (Y|N) [N] : Ret

        The file you have created has been saved in:

                SYS$COMMON:[SNA$CSV]SNAGATEWAY_SNAGWY_SNA.COM

        You can edit this command file to change the configuration
        of the SNA database in the Gateway. Any changes you make will
        take effect the next time the Gateway is reloaded.

================================================================================
  Part 3: Create a command file to configure the DECnet database in the Gateway
================================================================================

Do you wish to create this command file? (Y|N) [Y] : Ret

Privileged username? (1-16 chars) []: user Ret
Privileged password? (1-16 chars) []: alice Ret

        All questions for this section have been answered.

        The following NCP commands will be used to set the DECnet
        database on the Gateway each time the Gateway is loaded.

$!+-+-+-+-+-+-+-+-+-+-+-+-+-+-+-+-+-+-+-+-+-+-+-+-+-+-+-+-+-+-+-+-+-+-+-+-+-+
$! Start of File: SYS$COMMON:[SNA$CSV]SNAGATEWAY_SNAGWY_DNA.COM
$! DECnet SNA Gateway-ST DECnet configuration file
$! Created: 10-JUN-1989 16:27:47.85 by SNACST$CONFIGURE V1.2
$! Host node: CLOCK  User: SYSTEM
$!+-+-+-+-+-+-+-+-+-+-+-+-+-+-+-+-+-+-+-+-+-+-+-+-+-+-+-+-+-+-+-+-+-+-+-+-+-+
$ v = 'f$verify(0)'
$ DEFINE/NOLOG SNAGM$GATEWAY "SNAGWY""USER ALICE""::"
$ RUN SYS$SYSTEM:NCP
SET EXECUTOR NODE SNAGWY
SET EXECUTOR PRIV USER USER PASSWORD ALICE
$ EXIT $STATUS + (0 * f$verify(v))
$!+-+-+-+-+-+-+-+-+-+-+-+-+-+-+-+-+-+-+-+-+-+-+-+-+-+-+-+-+-+-+-+-+-+-+-+-+-+
$! End of File: SYS$COMMON:[SNA$CSV]SNAGATEWAY_SNAGWY_DNA.COM
$!+-+-+-+-+-+-+-+-+-+-+-+-+-+-+-+-+-+-+-+-+-+-+-+-+-+-+-+-+-+-+-+-+-+-+-+-+-+

Do you wish to redo this section? (Y|N) [N] : Ret

        The file you have created has been saved in:

                SYS$COMMON:[SNA$CSV]SNAGATEWAY_SNAGWY_DNA.COM

        You can edit this command file to change the configuration
        of the DECnet database in the Gateway. Any changes you make will
        take effect the next time the Gateway is reloaded.

================================================================================
         *Configuration Complete*
================================================================================
```

```
        You have now completed the three parts of the Gateway configuration
        procedure.  The files you have created will be used to configure
        the Gateway each time it is loaded.

** End of SNACST$CONFIGURE V1.2.
```

3.4 Sample DECnet/OSI Configuration

```
WECAN>@sys$manager:snacst$configure Ret

 SNACST$CONFIGURE V1.2
 DECnet SNA Gateway-ST configuration procedure.

 Configuration is divided into three parts:

 . Part 1: Define the Gateway node in the load host's
   DECnet database.

 . Part 2: Create a command file that will be used to
   configure the SNA database in the Gateway
   each time it is loaded.

 . Part 3: Create a command file that will be used to
   configure the DECnet database in the Gateway
   each time it is loaded.

 This configuration procedure prompts you to see if you want
 to run each of the three parts.  All parts must be completed
 before the Gateway can be loaded. Enter "?" at any time for
 help.

DECnet SNA Gateway-ST node name [] : SNAGED Ret

================================================================================
  Part 1: Define the Gateway node in the load host DECnet database
================================================================================

Define the Gateway node in WECAN's DECnet database? (Y|N) [Y] : Ret

DECnet node address of SNAGED (aa.nnnn) [] : 4.414 Ret
Ethernet hardware address (12 hex digits) [] : 08-00-2B-0A-C9-62 Ret
Load file (file-spec) [SYS$COMMON:[SNA$CSV]SNACST012.SYS] : Ret
Device and directory for dump file [SYS$COMMON:[SNA$CSV]] : Ret
Host's Ethernet circuit name (circuit-id) [SVA-0] : Ret
     Checksum file updated last by SILVERSTONE on  3-AUG-1993 11:56:03.81
%NET$CONFIGURE-I-VERCHECKSUM, verifying checksums

        The following NCL script files have been modified since being
        created by this procedure:

  SYS$SYSROOT:[SYSMGR]NET$ROUTING_STARTUP.NCL;
  SYS$SYSROOT:[SYSMGR]NET$CSMACD_STARTUP.NCL;
  SYS$SYSROOT:[SYSMGR]NET$EVENT_STARTUP.NCL;
  SYS$SYSROOT:[SYSMGR]NET$MOP_CIRCUIT_STARTUP.NCL;
```

```
        This procedure may create a new version of these scripts or modify
        information contained within them. In all cases, any previously
        created NCL scripts are renamed to "file.NCL-OLD", so that you
        may review any of your previous changes.

Node 0 MOP Client SNAGED
at 1993-08-03-14:50:57.730-04:00I0.191

%NET$CONFIGURE-I-MODCHECKSUM, checksumming NCL
     management scripts modified by NET$CONFIGURE
%NET$CONFIGURE-I-CONFIGCOMPLETED, DECnet/OSI for OpenVMS configuration completed
     Checksum file updated last by SILVERSTONE on  3-AUG-1993 14:51:09.74
%NET$CONFIGURE-I-VERCHECKSUM, verifying checksums

        The following NCL script files have been modified since being
        created by this procedure:

  SYS$SYSROOT:[SYSMGR]NET$ROUTING_STARTUP.NCL;
  SYS$SYSROOT:[SYSMGR]NET$CSMACD_STARTUP.NCL;
  SYS$SYSROOT:[SYSMGR]NET$EVENT_STARTUP.NCL;
  SYS$SYSROOT:[SYSMGR]NET$MOP_CIRCUIT_STARTUP.NCL;

        This procedure may create a new version of these scripts or modify
        information contained within them. In all cases, any previously
        created NCL scripts are renamed to "file.NCL-OLD", so that you
        may review any of your previous changes.

Node 0 MOP Client SNAGED
at 1993-08-03-14:51:31.840-04:00I0.194


Node 0 MOP Client SNAGED
at 1993-08-03-14:51:32.560-04:00I0.194

Characteristics

    Circuit                           = SVA-0

Node 0 MOP Client SNAGED
at 1993-08-03-14:51:32.690-04:00I0.194

Characteristics

    Addresses                         =
       {
          08-00-2B-0A-C9-62 ,
          AA-00-04-00-9E-11 (DEC:.LKG.SNAGED)
       }

Node 0 MOP Client SNAGED
at 1993-08-03-14:51:32.800-04:00I0.194

Characteristics
```

```
    System Image                        =
       {
          SYS$COMMON:[SNA$CSV]SNACST012.SYS
       }

Node 0 MOP Client SNAGED
at 1993-08-03-14:51:32.860-04:00I0.194

Characteristics

    Dump File                           =
       {
          SYS$COMMON:[SNA$CSV]SNAGED.DMP
       }

Node 0 MOP Client SNAGED
at 1993-08-03-14:51:32.930-04:00I0.194

Characteristics

    Dump Address                        = 0

Node 0 MOP Client SNAGED
at 1993-08-03-14:51:33.130-04:00I0.194

Characteristics

    Verification                        = '0000000000000000'H

Node 0 MOP Client SNAGED
at 1993-08-03-14:51:33.250-04:00I0.194

Characteristics

    Phase IV Host Name                  = WECAN

Node 0 MOP Client SNAGED
at 1993-08-03-14:51:33.410-04:00I0.194

Characteristics

    Phase IV Host Address               = 4.207

Node 0 MOP Client SNAGED
at 1993-08-03-14:51:33.510-04:00I0.194

Characteristics

    Phase IV Client Name                = SNAGED

Node 0 MOP Client SNAGED
at 1993-08-03-14:51:33.570-04:00I0.194

Characteristics
```

```
    Phase IV Client Address           = 4.414

%NET$CONFIGURE-I-MODCHECKSUM, checksumming NCL
     management scripts modified by NET$CONFIGURE
%NET$CONFIGURE-I-CONFIGCOMPLETED, DECnet/OSI for OpenVMS configuration completed

Proxy login for SNAGED::SNA$GO already exists.

Do you wish to redo this section? (Y|N) [N] : Ret

================================================================================
  Part 2: Create a command file to configure the SNA database in the Gateway
================================================================================

Do you wish to create this command file? (Y|N) [Y] : Ret

Number of lines to be configured (1-4) [1] : 1 Ret

                    +---------------+
                    |  Line SYN-0   |
                    +---------------+

Is the line full duplex? (Y|N) [N] : y Ret
Is the line multidropped? (Y|N) [N] : Ret
Does the line use NRZI signalling? (Y|N) [N] : Ret
Is the modem an IBM diagnostic modem? (Y|N) [N] : Ret
MAXDATA size? (bytes) [265] : Ret

                    +---------------+
                    |Circuit SDLC-0 |
                    +---------------+

Extended Response mode on circuit? (Y|N) [N] : Ret
Is the data transfer mode full duplex? (Y|N) [N] : y Ret
Station address (2 hex digits) [01] : 40 Ret
Station identifier (8 hex digits) [00000000] : Ret

                    +---------------+
                    |   PU SNA-0    |
                    +---------------+

Enter the list of available LU addresses (number or range) [1-255] : 1-64 Ret

                    +--------------+
                    | Access names |
                    +--------------+

You will now be prompted for one or more access names.
Press <RETURN> when you have no more to enter.

Access name (1-16 chars) [] : tso Ret
LU list (number or range) [] : 1-64 Ret
IBM application name (1-8 chars) [] : tsol Ret
IBM logon mode name (1-8 chars) [] : mcauto Ret
IBM user data (1-32 chars) [] : Ret
Access name (1-16 chars) [] : Ret
```

```
                    +-----------+
                    |  Servers  |
                    +-----------+

Server SNA-ACCESS
No questions for this server.

Server RJE
No questions for this server.

Server DHCF
You will now be prompted for the list of LUs allocated to DHCF for each PU.
Press <RETURN> if you do not wish to define any LU for a given PU.

LU list allocated to DHCF for PU SNA-0 (number or range) [] : Ret

 All questions for this section have been answered.

 The following SNANCP commands will be used to set the SNA database
 in the Gateway each time it is loaded.

$!+-+-+-+-+-+-+-+-+-+-+-+-+-+-+-+-+-+-+-+-+-+-+-+-+-+-+-+-+-+-+-+-+-+-+-+-+-+
$! Start of file: SYS$COMMON:[SNA$CSV]SNAGATEWAY_SNAGED_SNA.COM
$! DECnet SNA Gateway-ST SNA configuration file
$! Created:  3-AUG-1993 14:52:02.79 by SNACST$CONFIGURE V1.2
$! Host node: WECAN  User: SILVERSTONE
$!+-+-+-+-+-+-+-+-+-+-+-+-+-+-+-+-+-+-+-+-+-+-+-+-+-+-+-+-+-+-+-+-+-+-+-+-+-+
$ v = f$verify(1)
$ RUN SYS$SYSTEM:SNANCP
SET LINE SYN-0 -
   DUPLEX FULL -
   PROTOCOL SDLC POINT -
   SIGNALLING NORMAL -
   CLOCK EXTERNAL -
   MODEM TYPE NORMAL -
   RECEIVE BUFFERS 34 -
   LOGGING INFORMATIONAL -
   BUFFER SIZE 265
SET CIRCUIT SDLC-0 -
   LINE SYN-0 -
   DUPLEX FULL -
   RESPONSE MODE NORMAL -
   STATION ADDRESS 40 -
   LOGGING INFORMATIONAL -
   STATION ID 00000000
SET PU SNA-0 CIRCUIT SDLC-0 -
   LU LIST 1-64 -
   SEGMENT SIZE 265 -
   LOGGING WARNING
SET CIRCUIT SDLC-0 STATE ON
SET LINE SYN-0 STATE ON
SET ACCESS NAME TSO -
   LU LIST 1-64 -
   APPLICATION TSOL -
```

```
   LOGON MODE MCAUTO -
   PU SNA-0
Press RETURN to continue

SET SERVER SNA-ACCESS -
   LOGGING WARNING -
   NOTE "Gateway Access Server" -
   STATE ON
SET SERVER RJE -
   LOGGING WARNING -
   NOTE "Remote Job Entry" -
   STATE ON
SET SERVER DHCF -
   LOGGING WARNING -
   NOTE "Host Command Facility" -
   STATE OFF
$ EXIT $STATUS + (0 * 'f$verify(v)')
$!+-+-+-+-+-+-+-+-+-+-+-+-+-+-+-+-+-+-+-+-+-+-+-+-+-+-+-+-+-+-+-+-+-+-+-+-+-+-+-+-+
$! End of file: SYS$COMMON:[SNA$CSV]SNAGATEWAY_SNAGED_SNA.COM
$!+-+-+-+-+-+-+-+-+-+-+-+-+-+-+-+-+-+-+-+-+-+-+-+-+-+-+-+-+-+-+-+-+-+-+-+-+-+-+-+-+

Do you wish to redo this section? (Y|N) [N] : Ret

 The file you have created has been saved in:

  SYS$COMMON:[SNA$CSV]SNAGATEWAY_SNAGED_SNA.COM

 You can edit this command file to change the configuration
 of the SNA database in the Gateway. Any changes you make will
 take effect the next time the Gateway is reloaded.

================================================================================
  Part 3: Create a command file to configure the DECnet database in the Gateway
================================================================================

Do you wish to create this command file? (Y|N) [Y] : Ret

Privileged username? (1-16 chars) [] : system Ret
Privileged password? (1-16 chars) [] : system Ret

 All questions for this section have been answered.

 The following NCP commands will be used to set the DECnet
 database on the Gateway each time the Gateway is loaded.
```

```
$!+-+-+-+-+-+-+-+-+-+-+-+-+-+-+-+-+-+-+-+-+-+-+-+-+-+-+-+-+-+-+-+-+-+-+-+-+-+-+-+-+
$! Start of file: SYS$COMMON:[SNA$CSV]SNAGATEWAY_SNAGED_DNA.COM
$! DECnet SNA Gateway-ST DECnet configuration file
$! Created:  3-AUG-1993 14:53:17.34 by SNACST$CONFIGURE V1.2
$! Host node: WECAN  User: SILVERSTONE
$!+-+-+-+-+-+-+-+-+-+-+-+-+-+-+-+-+-+-+-+-+-+-+-+-+-+-+-+-+-+-+-+-+-+-+-+-+-+-+-+-+
$ v = 'f$verify(0)'
$ DEFINE/NOLOG SNAGM$GATEWAY "SNAGED""SYSTEM SYSTEM"""::"
$ RUN SYS$SYSTEM:NCP
SET EXECUTOR NODE SNAGED
SET EXECUTOR PRIV USER SYSTEM PASSWORD SYSTEM
$ EXIT $STATUS + (0 * f$verify(v))
$!+-+-+-+-+-+-+-+-+-+-+-+-+-+-+-+-+-+-+-+-+-+-+-+-+-+-+-+-+-+-+-+-+-+-+-+-+-+-+-+-+
$! End of file: SYS$COMMON:[SNA$CSV]SNAGATEWAY_SNAGED_DNA.COM
$!+-+-+-+-+-+-+-+-+-+-+-+-+-+-+-+-+-+-+-+-+-+-+-+-+-+-+-+-+-+-+-+-+-+-+-+-+-+-+-+-+

Do you wish to redo this section? (Y|N) [N] : Ret

 The file you have created has been saved in:

  SYS$COMMON:[SNA$CSV]SNAGATEWAY_SNAGED_DNA.COM

 You can edit this command file to change the configuration
 of the DECnet database in the Gateway. Any changes you make will
 take effect the next time the Gateway is reloaded.

================================================================================
         *Configuration Complete*
================================================================================

 You have now completed the three parts of the Gateway configuration
 procedure.  The files you have created will be used to configure
 the Gateway each time it is loaded.

** End of SNACST$CONFIGURE V1.2
```

4

Loading the Gateway-ST Software

This chapter describes how to down-line load the Gateway-ST software from the load host into the DEC MicroServer or DEC MicroServer-SP. You must complete the installation and configuration procedures described in the two previous chapters before you can load the Gateway-ST software.

You load the Gateway-ST software in one of two ways:

- For the initial loading of the software, plug in the DEC MicroServer or DEC MicroServer-SP to power it up. As part of its power-up sequence, the unit requests a load of the software from the load host.
- For subsequent loading of the software, issue an NCP TRIGGER or LOAD command on the load host.

Loading should take about five minutes. The time varies according to the following:

- The type of CPU and disks on the load host
- The amount of other work the load host is processing
- The traffic on the local area network (LAN)

Note

The following commands and examples are based on the software loading of a DECnet/VAX system, and may be different from DECnet /OSI. See Section 4.5 for a complete sample loading of the software on a DECnet/OSI system. Also, refer to the *DECnet/OSI NCL Reference Manual* for more information on NCL commands.

4.1 Before Loading the Gateway-ST

Before attempting to load the Gateway-ST software, you should check the connection between the DEC MicroServer or DEC MicroServer-SP and the load host, and you should enable event logging.

4.1.1 Checking the Load Host Connection

Check the following items before trying to load the Gateway-ST software:

- The line associated with the Ethernet circuit over which the software will be loaded must be defined and set to ON (use the NCP SHOW LINE command).
- The circuit on the load host must be enabled for service (use the NCP SHOW CIRCUIT CHARACTERISTICS command).
- The service timer must be set to a large enough value to allow the software to load (use the NCP SHOW LINE CHARACTERISTICS command). The service timer sets the maximum time that will elapse during service for the Gateway before a retransmission is necessary. The default of 4,000 milliseconds should be enough (use the NCP SET LINE SERVICE TIMER to change this value).

For more information on the DECnet NCP commands, refer to the *OpenVMS Network Control Program Manual*.

4.1.2 Enabling Event Logging on the Load Host

If you enable event logging at a terminal connected to the load host, you receive a log of the events that occur during loading. You can examine this log to verify that the Gateway-ST software loaded successfully. In case of a problem while loading the Gateway-ST software, you can examine the event log to determine the cause of the problem.

Note

To enable logging at a terminal connected to the load host, you need OPER privilege.

Issue the following DCL command from the terminal on which you want to receive the event log:

```
$ REPLY/ENABLE=NETWORK
```

You can ensure that SNA event logging is active by using the DCL SHOW SYSTEM command. There should be a process called SNAEVL. Use the following syntax:

```
$ SHOW SYSTEM
```

4.2 Loading the Software from the Hardware Unit

To initiate the loading of the Gateway software, power up the hardware unit (either the DEC MicroServer or the DEC MicroServer-SP). If the unit is already powered up, press the DUMP button. This method of loading the Gateway-ST software produces a dump file.

4.3 Loading the Software from a Terminal

You can use variations of the NCP TRIGGER and LOAD commands to start loading the Gateway software. There are different procedures for the following cases:

- Your terminal is logged into the load host. (See Section 4.3.1.)
- Your terminal is logged into a host other than the load host. (See Section 4.3.2.)

The TRIGGER command sets off a bootstrap mechanism in the DEC MicroServer or DEC MicroServer-SP. This command causes the unit to send a request-to-load message to all hosts on the Ethernet local area network. Gateway load hosts are configured to receive the message. The first load host that responds to the request-to-load message loads the Gateway software into the Gateway node.

The LOAD command loads software into the hardware unit by using the specified circuit or the circuit obtained from the DECnet database on the host from which the command is issued.

If there are no errors during loading, the load host's console displays the following event messages; the exact messages and sequence might vary:

```
%%%%%%%%%%  OPCOM  dd-mmm-yyyy hh:mm:ss.ss  %%%%%%%%%%
Message from user DECNET on nodename
DECnet event 0.3, automatic line service
From node aa.ssss (nodename), dd-mmm-yyyy hh:mm:ss.ss
Circuit dev-n, Load, Requested, Node = aa.ssss (nodename)
File=SYS$COMMON:[SNA$CSV]SNACST012.SYS, Operating system
Ethernet address: nn-nn-nn-nn-nn-nn
```

```
%%%%%%%%%%  OPCOM  dd-mmm-yyyy hh:mm:ss.ss  %%%%%%%%%%
Message from user DECNET on nodename
DECnet event 0.3, automatic line service
From node aa.ssss (nodename), dd-mmm-yyyy hh:mm:ss.ss
Circuit dev-n, Load, Successful, Node = aa.ssss (nodename)
File=SYS$COMMON:[SNA$CSV]SNACST012.SYS, Operating system
Ethernet address: nn-nn-nn-nn-nn-nn

%%%%%%%%%%  OPCOM  dd-mmm-yyyy hh:mm:ss.ss  %%%%%%%%%%
Message from user SYSTEM on nodename
DECnet SNA event 266.10, Logging sink state change
From node aa.ssss (nodename), dd-mmm-yyyy hh:mm:ss.ss
Logging sink type = monitor, Severity = informational
Sink node = aa.ssss (nodename)
New state = on, old state = off

%%%%%%%%%%  OPCOM  dd-mmm-yyyy hh:mm:ss.ss  %%%%%%%%%%
Message from user SYSTEM on nodename
DECnet SNA event 266.0, Gateway initialization
From node aa.ssss (nodename), dd-mmm-yyyy hh:mm:ss.ss
SNA gateway management,  Severity = informational
Started, DECnet SNA Gateway-ST V1.2

%%%%%%%%%%  OPCOM  dd-mmm-yyyy hh:mm:ss.ss  %%%%%%%%%%
Message from user SYSTEM on nodename
DECnet SNA event 266.2, Initialization message
From node aa.ssss (nodename), dd-mmm-yyyy hh:mm:ss.ss
SNA gateway management,  Severity = informational
Default node database loaded

%%%%%%%%%%  OPCOM  dd-mmm-yyyy hh:mm:ss.ss  %%%%%%%%%%
Message from user SYSTEM on nodename
DECnet SNA event 266.2, Initialization message
From node aa.ssss (nodename), dd-mmm-yyyy hh:mm:ss.ss
SNA gateway management,  Severity = informational
Setting gateway DECnet configuration

%%%%%%%%%%  OPCOM  dd-mmm-yyyy hh:mm:ss.ss  %%%%%%%%%%
Message from user SYSTEM on nodename
DECnet SNA event 266.2, Initialization message
From node aa.ssss (nodename), dd-mmm-yyyy hh:mm:ss.ss
SNA gateway management,  Severity = informational
Setting gateway SNA configuration

%%%%%%%%%%  OPCOM  dd-mmm-yyyy hh:mm:ss.ss  %%%%%%%%%%
Message from user SYSTEM on nodename
DECnet SNA event 256.0, Line state change
From node aa.ssss (nodename), dd-mmm-yyyy hh:mm:ss.ss
Line SYN-n,  Severity = informational
New state = on, old state = off
```

When the software has been loaded and initialized without error, you see the following display:

```
%%%%%%%%%%  OPCOM  dd-mmm-yyyy hh:mm:ss.ss  %%%%%%%%%%
Message from user SYSTEM on nodename
DECnet SNA event 266.0, Gateway initialization
From node aa.ssss (nodename), dd-mmm-yyyy hh:mm:ss.ss
SNA gateway management,  Severity = informational
Complete, status = success
%SYSTEM-S-NORMAL, normal successful completion
```

When the IBM system responds to the Gateway-ST, you see the following display:

```
%%%%%%%%%%  OPCOM  dd-mmm-yyyy hh:mm:ss.ss  %%%%%%%%%%
Message from user SYSTEM on nodename
DECnet SNA event 257.0, Circuit state change
From node aa.ssss (nodename), dd-mmm-yyyy hh:mm:ss.ss
Circuit SDLC-0,  Severity = informational
New state = on, old state = on-starting
```

If there are errors during loading, the load host's console displays (in place of the preceding messages) any errors detected during loading and Gateway-ST initialization. For a list of SNANCP error messages and how to recover from them, refer to the *DECnet SNA Gateway-CT and ST Management (OpenVMS)*.

If any errors occur when loading the configuration file, the errors are reported to the event log. The *DECnet SNA Gateway-CT and ST Management (OpenVMS)* lists and explains all initialization messages generated by the Gateway-ST software.

If you issue an NCP TRIGGER command from any node on the Ethernet LAN and the Gateway node fails to start, you might try starting the load at the hardware unit (as described in Section 4.2). Refer to the *DECnet SNA Gateway-ST Problem Solving* if you need help finding the source of a failure.

4.3.1 Loading from a Terminal Logged into the load host

Issue the NCP TRIGGER NODE command using the following format:

```
NCP>TRIGGER NODE node-id
```

where

node-id Identifies the name of the Gateway node

The following is an example of the NCP TRIGGER command:

```
NCP>TRIGGER NODE SNAGWY
```

```
NCP>TRIGGER VIA dev-c PHYSICAL ADDRESS nn-nn-nn-nn-nn-nn
```

where

dev-c Is the Ethernet circuit id

nn-nn-nn-nn-nn-nn Is the Gateway Ethernet address

Issue the NCP LOAD NODE command using the following format:

```
NCP>LOAD NODE node-id
```

where

node-id Identifies the name of the Gateway node.

Issue the NCP LOAD VIA command using the following format:

```
NCP>LOAD VIA dev-c PHYSICAL ADDRESS nn-nn-nn-nn-nn-nn
```

where

dev-c Is the Ethernet circuit id

nn-nn-nn-nn-nn-nn Is the Gateway Ethernet address

Use the NCP TELL command to obtain the Ethernet address of the Gateway:

```
NCP>TELL gateway_node_name SHOW EXECUTOR STATUS
```

When you issue a command, any information needed to load the software but not specified on the command line (such as the circuit to be used and the name of the files being loaded) is taken from the DECnet database of the load host.

4.3.2 Loading from a Terminal Not Logged into the Load Host

Use the NCP TELL command to indicate that the loading of the Gateway-ST software should take place from the load host.

When using the NCP TRIGGER NODE command, enter the following command line:

```
NCP>TELL node1-id USER user-id PASSWORD password TRIGGER NODE node2-id
```

where

node1-id Is the load host

node2-id Is the Gateway node

The following is an example of loading software when your terminal is not logged in to the load host. The load host name and Gateway name correspond with the names used in the configuration procedure.

```
NCP>TELL CLOCK USER SYSTEM PASSWORD ALICE TRIGGER NODE SNAGWY
```

When using the NCP TRIGGER VIA command, enter the following command line:

```
NCP>TELL node-id USER user-id PASSWORD
password TRIGGER VIA BNA-n -
- PHYSICAL ADDRESS nn-nn-nn-nn-nn-nn
```

where

node-id	Is the load host
n	Is the Ethernet circuit id
nn-nn-nn-nn-nn-nn	Is the Gateway Ethernet address

When using the NCP LOAD NODE command, enter the following command line:

```
NCP>TELL node1-id USER user-id PASSWORD password LOAD NODE node2-id
```

where

node1-id	Is the load host
node2-id	Is the Gateway node

When using the NCP LOAD VIA command, enter the following command line:

```
NCP>TELL node-id USER user-id PASSWORD password LOAD VIA BNA-n -
- PHYSICAL ADDRESS nn-nn-nn-nn-nn-nn
```

where

node-id	Is the load host
n	Is the Ethernet circuit id
nn-nn-nn-nn-nn-nn	Is the Gateway Ethernet address

The access control information you provide for the USER and PASSWORD parameters must specify an account with OPER privileges.

4.4 Checking the Gateway Node to Load Host Connection

When you have successfully loaded the Gateway-ST software, you should check the connection between the Gateway node and the load host. When the Gateway node boots, verify that the link from the load host to DECnet is working properly, as follows:

1. Verify that the load host can communicate with the Gateway node, by issuing the NCP command SET EXECUTOR NODE with the Gateway node ID. If you get an error message after entering this command, refer to the *DECnet SNA Gateway-ST Problem Solving* for help.

2. Check the results of the NCP SET EXECUTOR NODE command with the following command:

   ```
   NCP>SHOW EXECUTOR STATUS
   ```

   If you get an error message after this command, refer to the Configuring the Gateway chapter in the manual *DECnet SNA Gateway-ST Problem Solving*. Also, check the event log for a message showing circuit activity with the DECnet node since the Gateway-ST was booted.

Refer to the *OpenVMS Network Control Program Manual* and the *OpenVMS Networking Manual* for further details on connections within a DECnet network.

4.5 Sample DECnet/OSI Configuration

```
WECAN Ret

WECAN>set host/mop SNAGED Ret
%CCR-I-CONNEST, connection established to remote system AA-00-04-00-9E-11
Press CTRL/\ to disconnect, CTRL/] to send break
DEMSA Console
ROM Firmware Version:   4-FEB-1988 11:51

Processor State: Ret
*RUNNING*

Software state : Ret
Running>>>

boot Ret

Processor not halted>>>
halt Ret

DEMSA Restart 08-00-2B-0A-C9-62
Code 25 (HALT command) PC 00001799 PS
L 041F0000 ISP 00064778>>>

boot Ret

Performing self test...    (This will take a couple of minutes)
%SYSTEM-F-HANGUP, data set hang-up

WECAN>set proc/priv=all Ret
WECAN>repl/en=net Ret

%%%%%%%%%%  OPCOM   3-AUG-1993 14:54:35.28  %%%%%%%%%%
Operator _WECAN$RTA1: has been enabled, username SILVERSTONE

%%%%%%%%%%  OPCOM   3-AUG-1993 14:54:36.09  %%%%%%%%%%
Operator status for operator _WECAN$RTA1:NETWORK
```

```
%%%%%%%%%%  OPCOM   3-AUG-1993 14:56:23.22  %%%%%%%%%%
Message from user SYSTEM on WECAN DECnet SNA event 266.10,
Logging sink state change
From node 4.414 (SNAGED),  3-AUG-1993 14:56:22.53
Logging sink type = monitor,  Severity = informational
Sink node = 4.207 (WECAN)
New state = on, old state = off

%%%%%%%%%%  OPCOM   3-AUG-1993 14:56:25.35  %%%%%%%%%%
Message from user SYSTEM on WECAN DECnet SNA event 266.0,
Gateway initialization
From node 4.414 (SNAGED),  3-AUG-1993 14:56:24.52
Management,  Severity = informational
Started, DECnet SNA Gateway-ST V1.2-03

%%%%%%%%%%  OPCOM   3-AUG-1993 14:56:31.52  %%%%%%%%%%
Message from user SYSTEM on WECAN
DECnet SNA event 266.1, Initialization failure
From node 4.414 (SNAGED),  3-AUG-1993 14:56:31.01
Management,  Severity = error
Failed to connect, load host NML
%SYSTEM-F-REJECT, connect to network object rejected

%%%%%%%%%%  OPCOM   3-AUG-1993 14:58:04.77  %%%%%%%%%%
Message from user SYSTEM on WECAN
DECnet SNA event 266.1, Initialization failure
From node 4.414 (SNAGED),  3-AUG-1993 14:58:04.28
Management,  Severity = error
Failed to connect, load host NML
%SYSTEM-F-REJECT, connect to network object rejected

%%%%%%%%%%  OPCOM   3-AUG-1993 14:58:09.98  %%%%%%%%%%
Message from user SYSTEM on WECAN
DECnet SNA event 266.1, Initialization failure
From node 4.414 (SNAGED),  3-AUG-1993 14:58:04.52
Management,  Severity = error
Retry limit exceeded

%%%%%%%%%%  OPCOM   3-AUG-1993 14:58:15.62  %%%%%%%%%%
Message from user SYSTEM on WECAN
DECnet SNA event 266.2, Initialization message
From node 4.414 (SNAGED),  3-AUG-1993 14:58:15.15
Management,  Severity = informational
Setting gateway DECnet configuration

%%%%%%%%%%  OPCOM   3-AUG-1993 14:58:19.19  %%%%%%%%%%
Message from user SYSTEM on WECAN
DECnet SNA event 266.2, Initialization message
From node 4.414 (SNAGED),  3-AUG-1993 14:58:18.73
Management,  Severity = informational
Setting gateway SNA configuration
```

```
%%%%%%%%%%  OPCOM   3-AUG-1993 14:58:22.59  %%%%%%%%%%
Message from user SYSTEM on WECAN
DECnet SNA event 256.0, Line state change
From node 4.414 (SNAGED),  3-AUG-1993 14:58:22.11
Line SYN-0,  Severity = informational
New state = on, old state = off

%%%%%%%%%%  OPCOM   3-AUG-1993 14:58:23.87  %%%%%%%%%%
Message from user SYSTEM on WECAN
DECnet SNA event 257.0, Circuit state change
From node 4.414 (SNAGED),  3-AUG-1993 14:58:22.15
Circuit SDLC-0,  Severity = informational
New state = on-starting, old state = off

%%%%%%%%%%  OPCOM   3-AUG-1993 14:58:25.72  %%%%%%%%%%
Message from user SYSTEM on WECAN
DECnet SNA event 257.0, Circuit state change
From node 4.414 (SNAGED),  3-AUG-1993 14:58:24.51
Circuit SDLC-0,  Severity = informational
New state = on, old state = on-starting

%%%%%%%%%%  OPCOM   3-AUG-1993 14:58:50.01  %%%%%%%%%%
Message from user SYSTEM on WECAN
DECnet SNA event 266.0, Gateway initialization
From node 4.414 (SNAGED),  3-AUG-1993 14:58:49.53
Management,  Severity = informational
Complete, status = success

WECAN>log
  SILVERSTONE  logged out at  3-AUG-1993 15:01:15.25
```

Index

A

Access name
  defined, 3–12
  IBM application name, 3–13
  IBM user data, 3–13
  logon mode name, 3–13
  LU defined for an, 3–12
Access node
  defined, 1–5
  prerequisites for, 1–8
Adapter cable
  V.24, 1–10
  V.35, 1–10

C

Circuit
  checking the Gateway load host connection, 1–7
Circuits
  checking status of Gateway load host connection, 1–6
  duplex mode for, 3–10
  Ethernet, 3–6
  response mode for, 3–10
  station address for, 3–11
  station identifier for, 3–11
Communications equipment
  adapter cable, 1–10
  connecting the Gateway-ST to an SNA network, 1–8
  connecting the Gateway-ST to Ethernet cable, 1–8
Communications equipment (cont'd)
  DEC MicroServer, 1–9
  modems, 1–10
Communications lines
  buffer size for, 3–9
  checking status of Gateway load host connection, 1–6
  checking the Gateway load host connection, 1–7
  data line protocol for, 3–9
  duplex mode for, 3–8
  Gateway-ST to Ethernet, 1–8
  Gateway-ST to SNA network, 1–8
  modem types for, 3–9
  signaling convention for, 3–9
Configuring the Gateway-ST
  getting help while, 3–4
  preparing for, 3–2
  running the configuration procedure, 3–4

D

DEC MicroServer
  available data speeds for, 1–9
  available ports for, 1–9
  synchronous communications links for, 1–9
DECnet database information
  configuration file specification, 3–15
DECnet node
  access node, 1–5
  Gateway load host node, 1–5
  Gateway node, 1–5

DECnet proxy login database (NETPROXY)
created during installation, 2–10
DECnet SNA network
DECnet nodes in a, 1–4 to 1–5
figure, 1–2, 1–3

E

Errors
during installation, 2–15
reporting problems as, 2–16
Ethernet
address, 3–6
circuit ID, 3–6
Event logging
enabling before loading the Gateway-ST, 4–2

F

Files
created during installation, 2–13

G

Gateway DECnet database
initialization process, 3–15
specifying privileged password, 3–16
specifying privileged username, 3–16
Gateway load host node
checking circuit status, 1–6
checking communications line status, 1–6
checking connection to Gateway node, 4–7
defined, 1–5
multiple hosts as, 1–6
steps for Gateway-ST software preparation, 1–6 to 1–8
VMScluster considerations, 3–5
Gateway Management software
installation recommendation for access nodes, 1–8
installation requirements for Gateway load host, 1–6
Gateway node
checking connection to load host node, 4–7
configuration file specification, 3–1
DECnet node address, 3–5
defined, 1–5
Dump file device and directory, 3–6
Ethernet hardware address, 3–6
Host's Ethernet service circuit, 3–6
specifying during configuration, 3–5

H

Help
during configuration procedure, 3–4
during installation procedure, 2–7

I

IBM environment
preparing for Gateway installation, 1–4
Installation Verification Procedure (IVP), running during installation, 2–11
Installing the Gateway-ST
disk space requirements, 1–7
files created, 2–13
Gateway-ST to Ethernet line requirements, 1–8
Gateway-ST to SNA network line requirements, 1–8
preinstallation tasks for, 2–1
preparing the IBM environment for, 1–4
sample installation for, 2–17 to 2–19
script, 2–7 to 2–13
summary, 1–1

L

Lines
see Communications lines
Loading the Gateway software
from a load host terminal, 4–5
with NCP LOAD NODE command, 4–3
with NCP TRIGGER NODE command, 4–3

Loading the Gateway-ST software
from a terminal not logged into load host, 4–6
initial loading, 4–1
preloading tasks for, 4–2 to 4–3
with NCP LOAD NODE command, 4–1
LU addresses
defined for an access name, 3–12
defined for DHCF server, 3–13

M

Modems
installation requirements, 1–10
selecting an adapter cable, 1–10

N

NCP TELL, 4–6
NETPROXY file, 2–10

P

PU
LUs defined for the PU, 3–11

R

Release notes
accessing, 2–2
file specification for, 2–2
installation options for, 2–8
RIGHTSLIST file, 2–10

S

SNA components
access names, 3–12 to 3–13
circuits, 3–10
configuration file specification, 3–7
lines, 3–8
physical units (PUs), 3–11
Software
maintenance updates for, 2–16
requirements for installation, 2–2

U

UIC, 2–11